CHAMP M02/L

BED 3.5 ft.

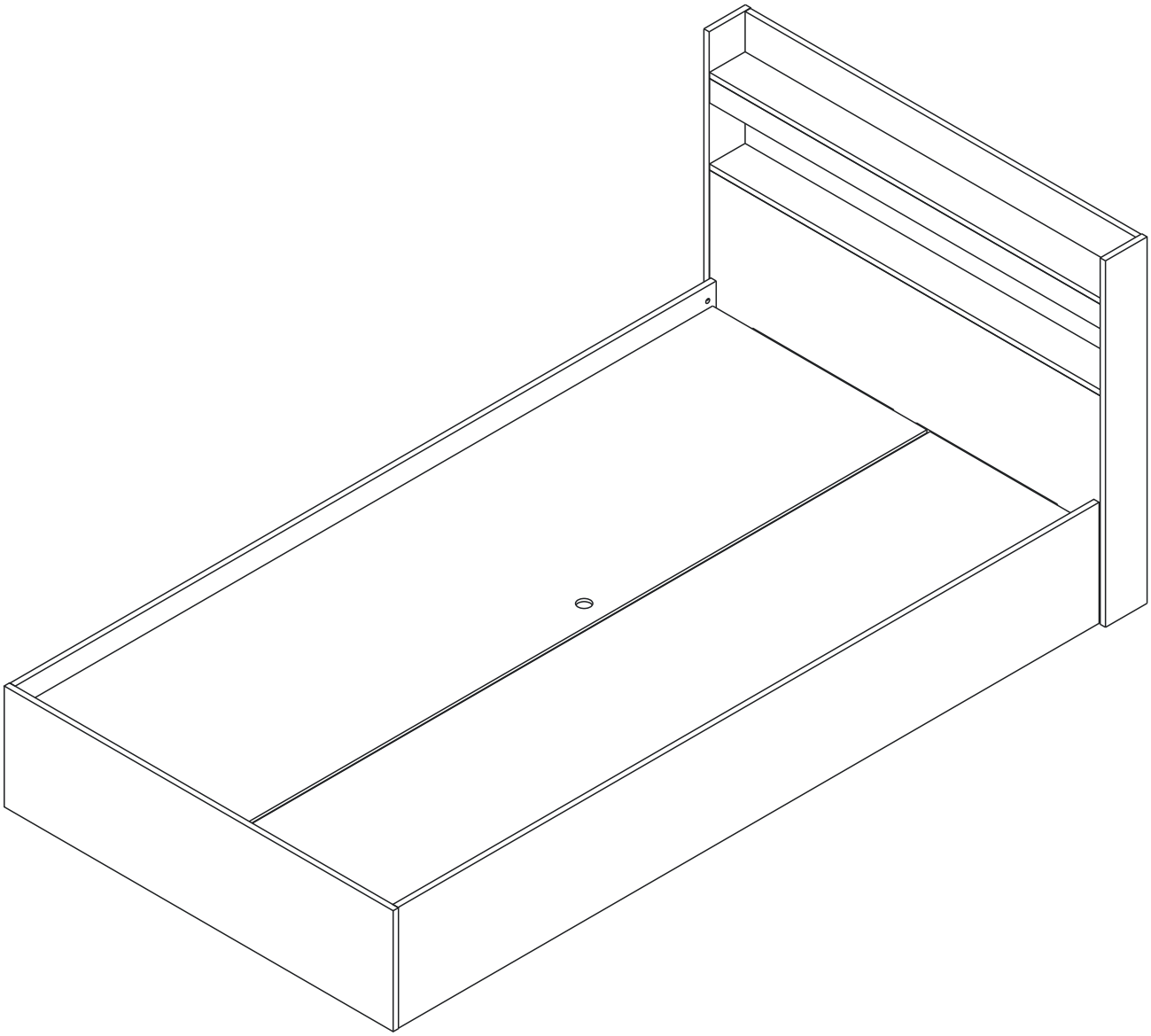

Indexlivingmall

CONNECT SYSTEM

1

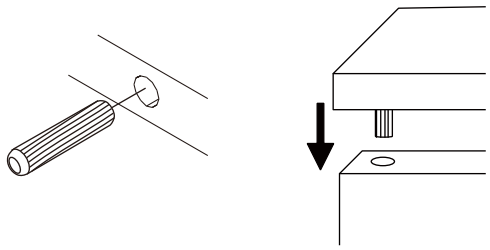

2

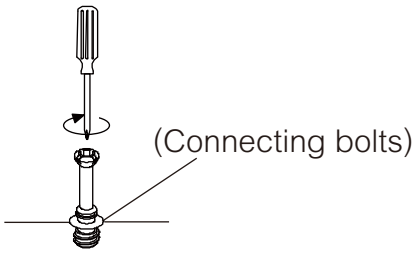

3

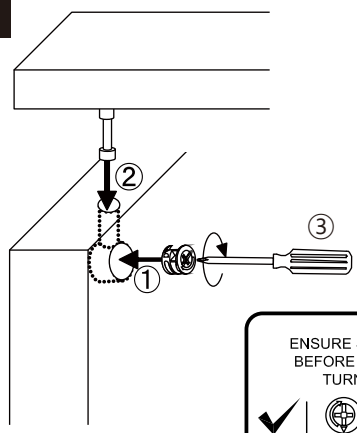

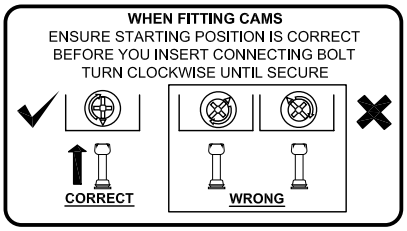

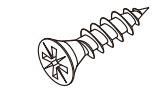

M4x16mm.

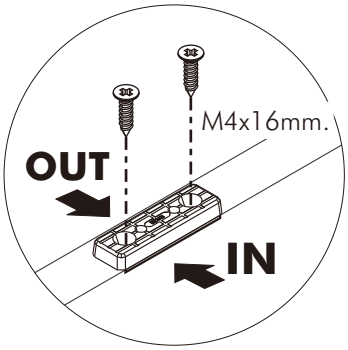

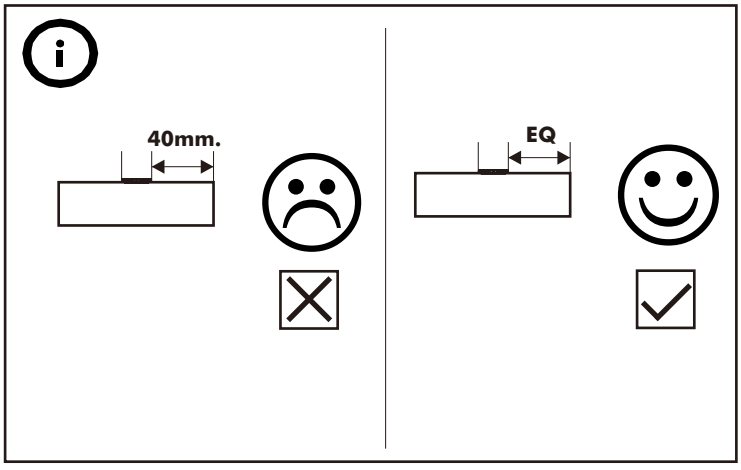

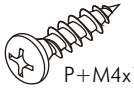

P+M4x13mm.

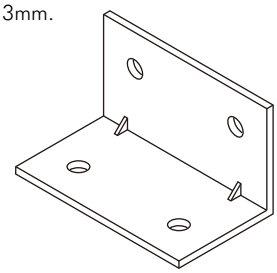

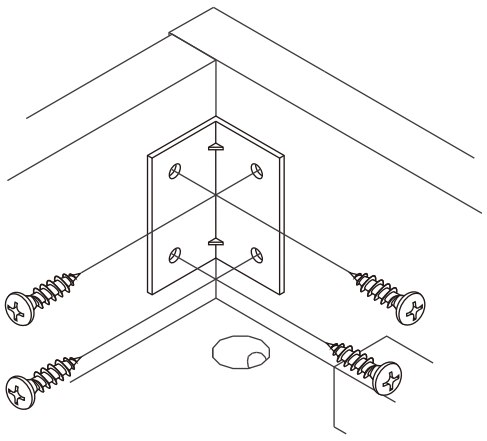


M4x16mm.

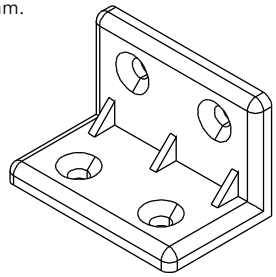

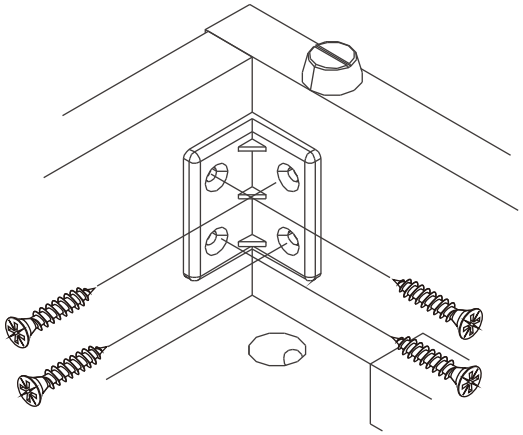

HARDWARE

-BODY SET

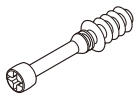

x 4



16mm.

x 4

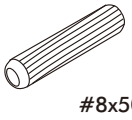

#8x50

x 8

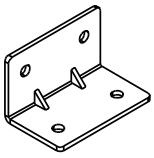

x 8

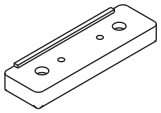

x 15



No.1

x 3

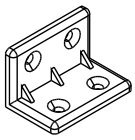

x 4



M4x30mm.

x 30



M4x16mm.

x 46



M4x13mm.

x 35

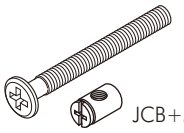

JCB+M6x60

x 4

ASSEMBLY

-BODY SET

1.

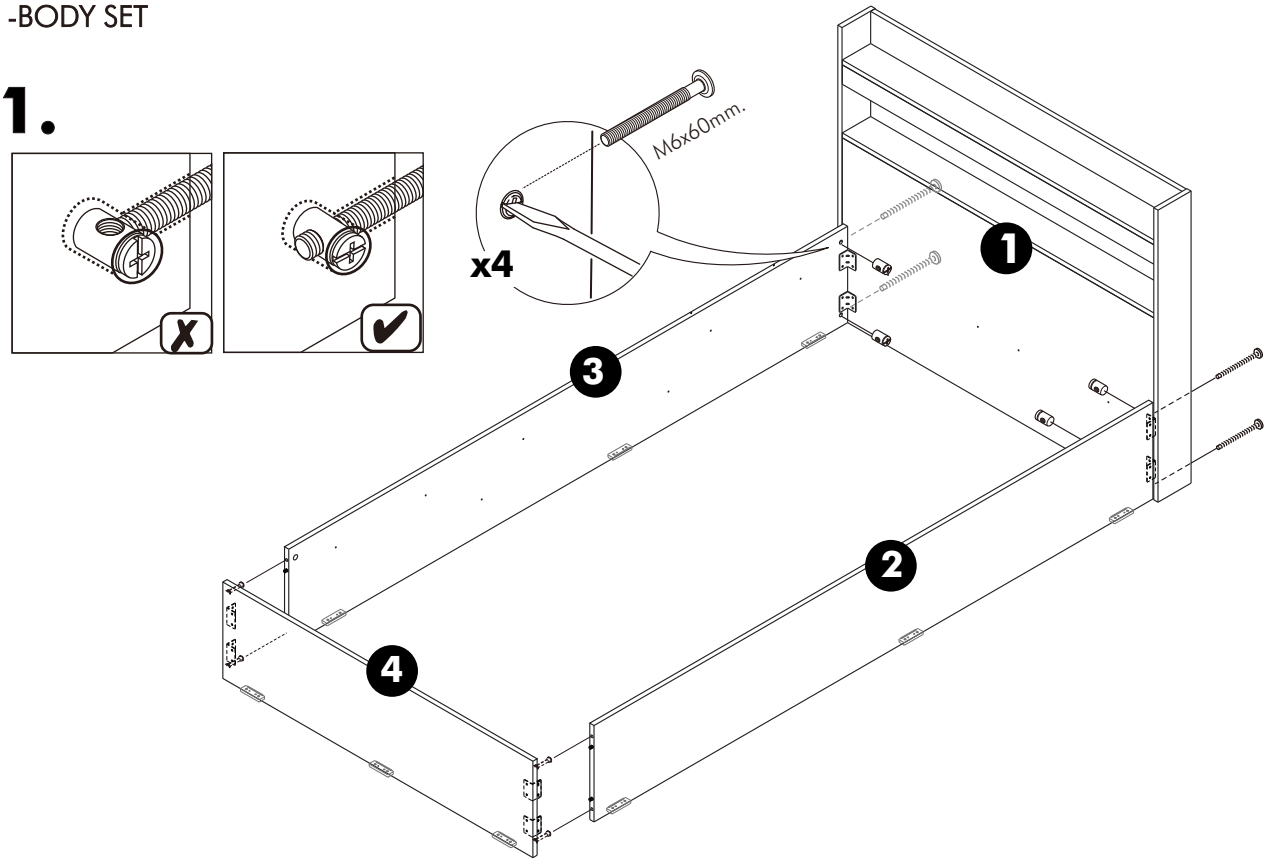

2.

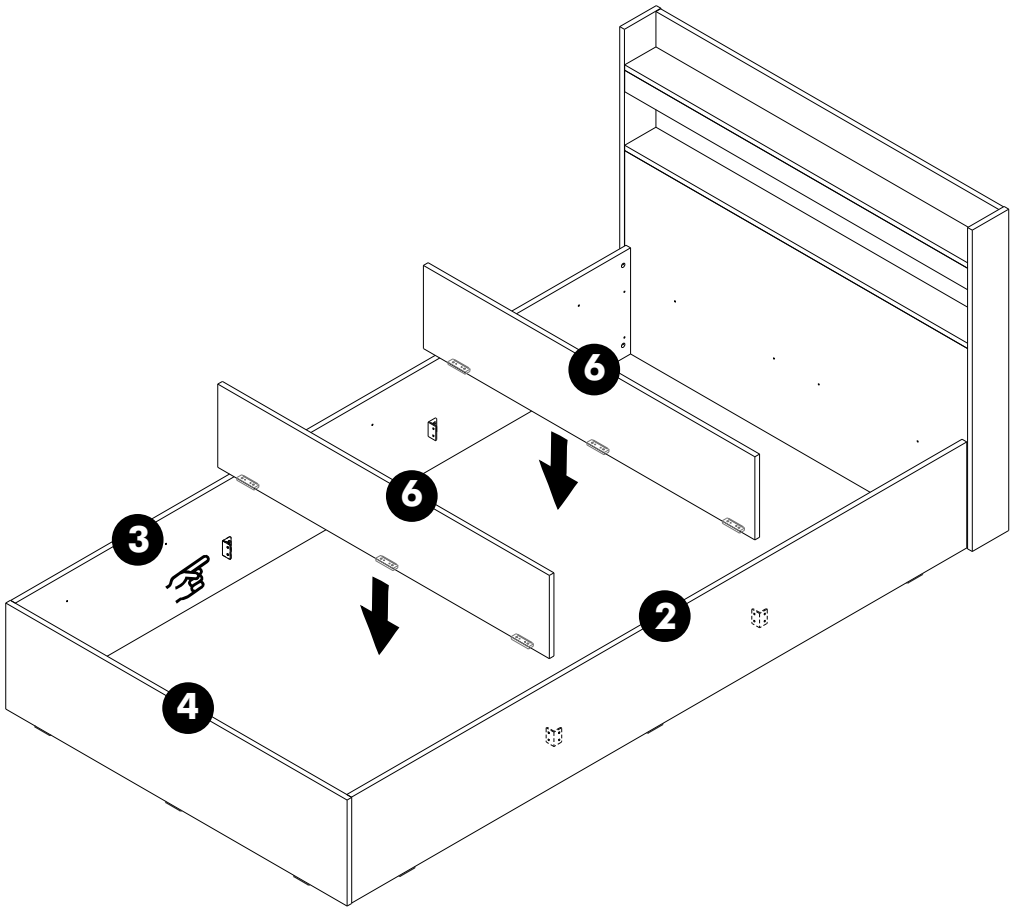

3.

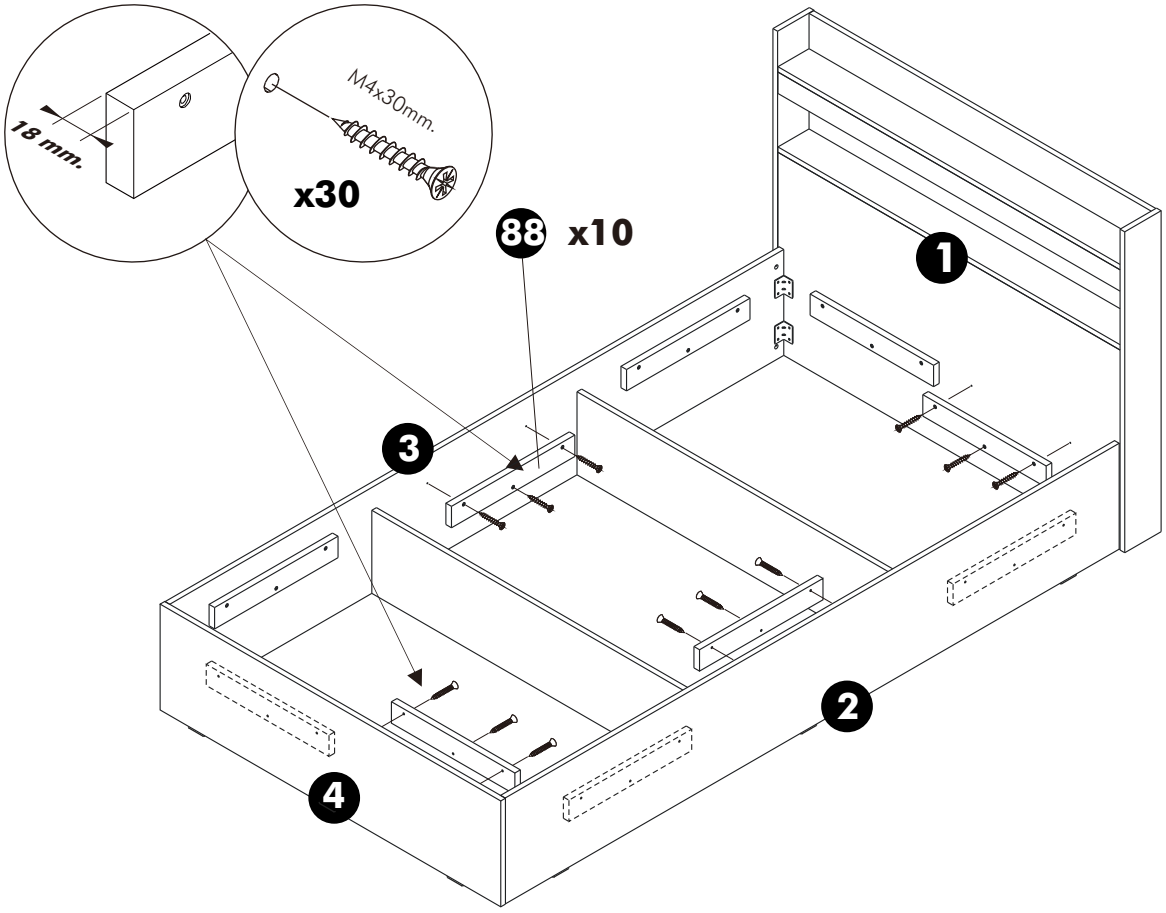

4.

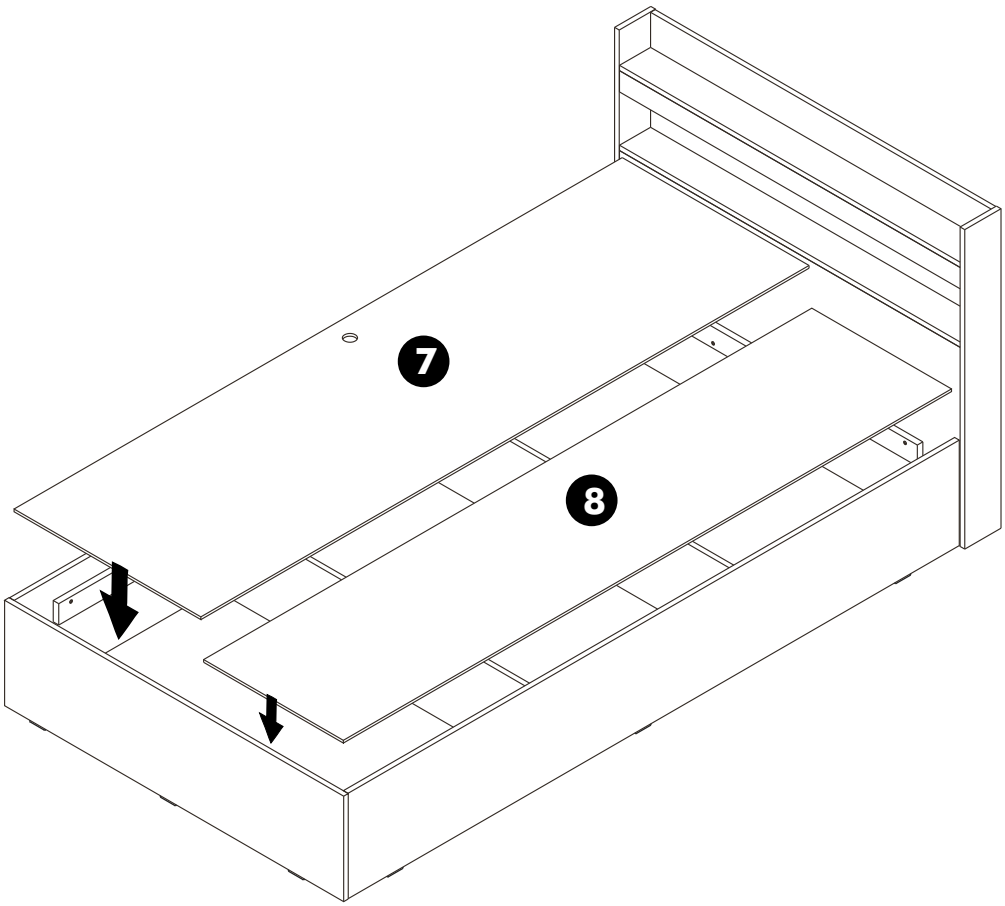

5.

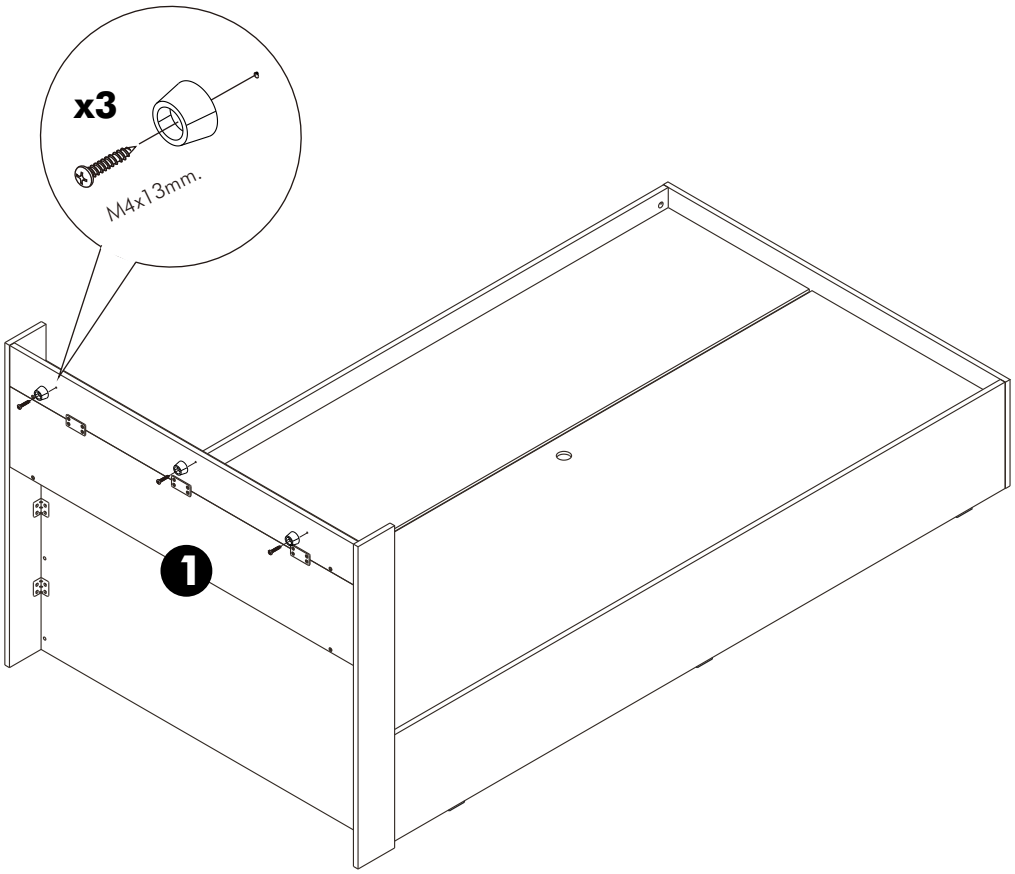

CHAMP M02/L

BED 3.5 ft.

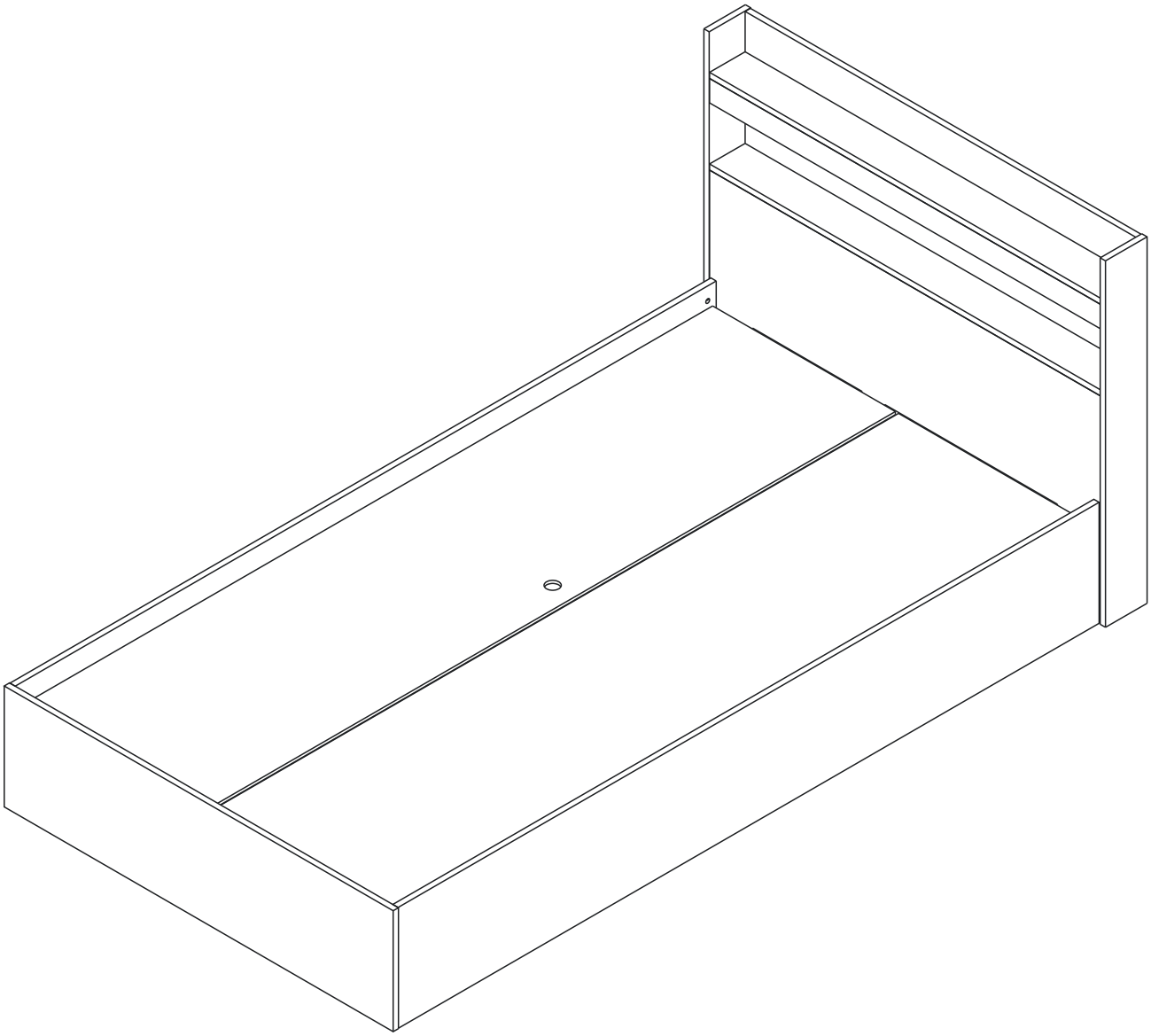

Indexlivingmall

CONNECT SYSTEM

1

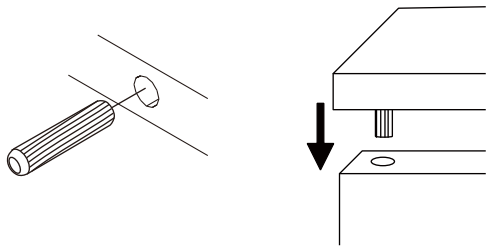

2

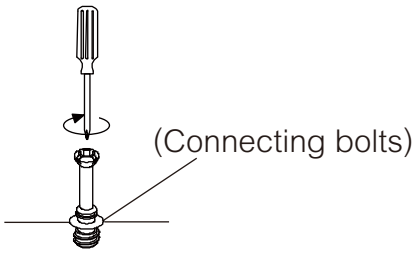

3

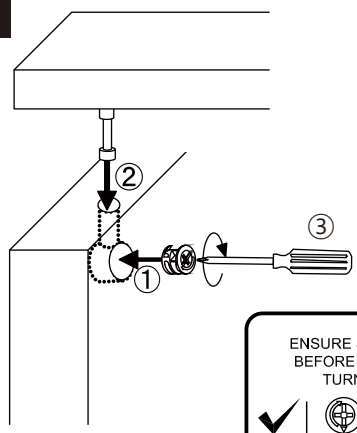

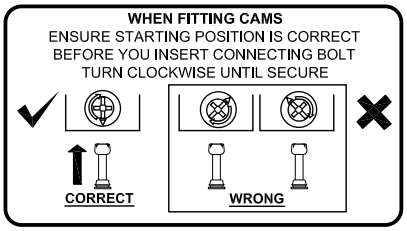

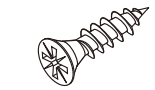

M4x16mm.

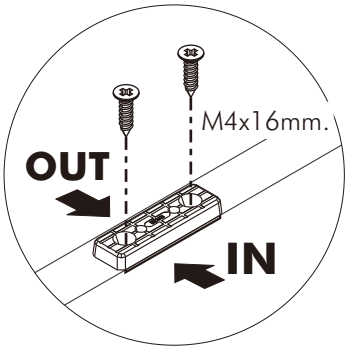

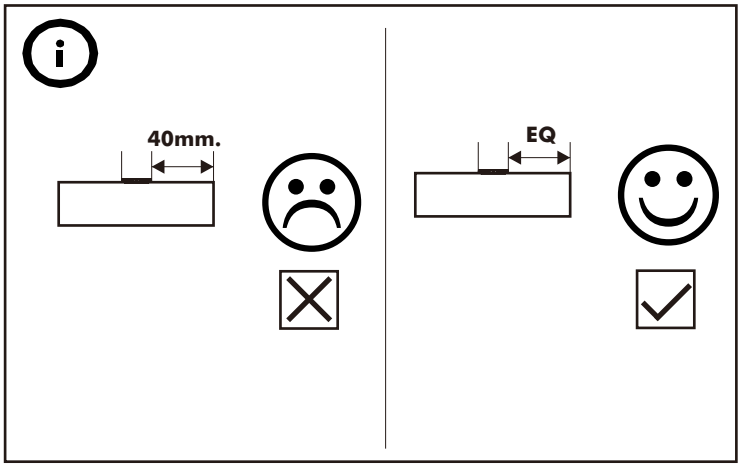

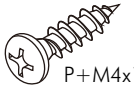

P+M4x13mm.

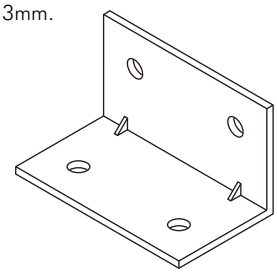

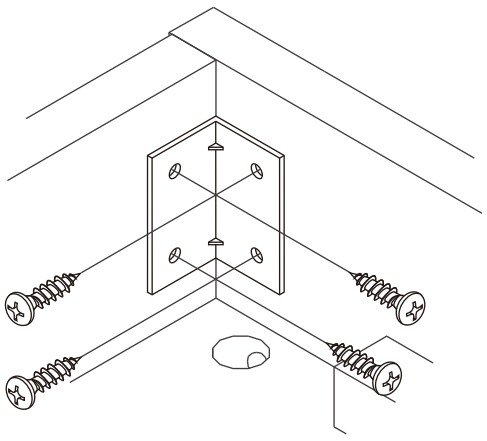


M4x16mm.

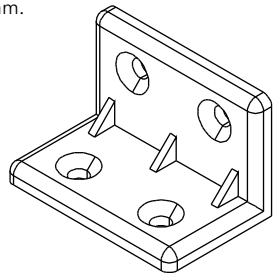

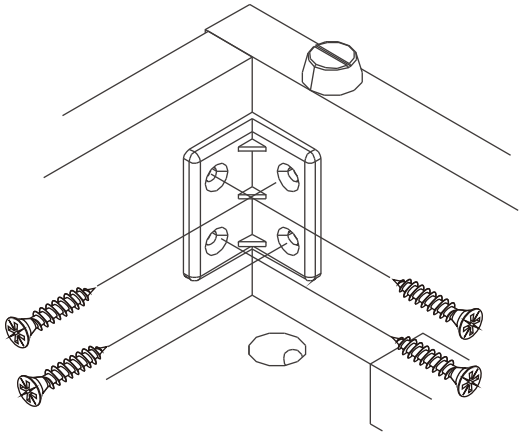

HARDWARE

-BODY SET

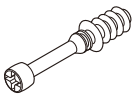

x 4



16mm.

x 4

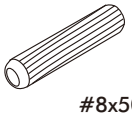

#8x50

x 8

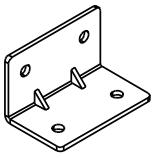

x 8

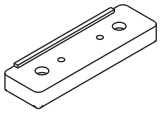

x 15



No.1

x 3

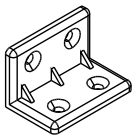

x 4

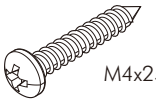

M4x25mm.

x 30



M4x16mm.

x 46



M4x13mm.

x 35

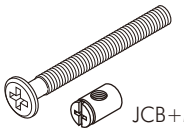

JCB+M6x60

x 4

ASSEMBLY

-BODY SET

1.

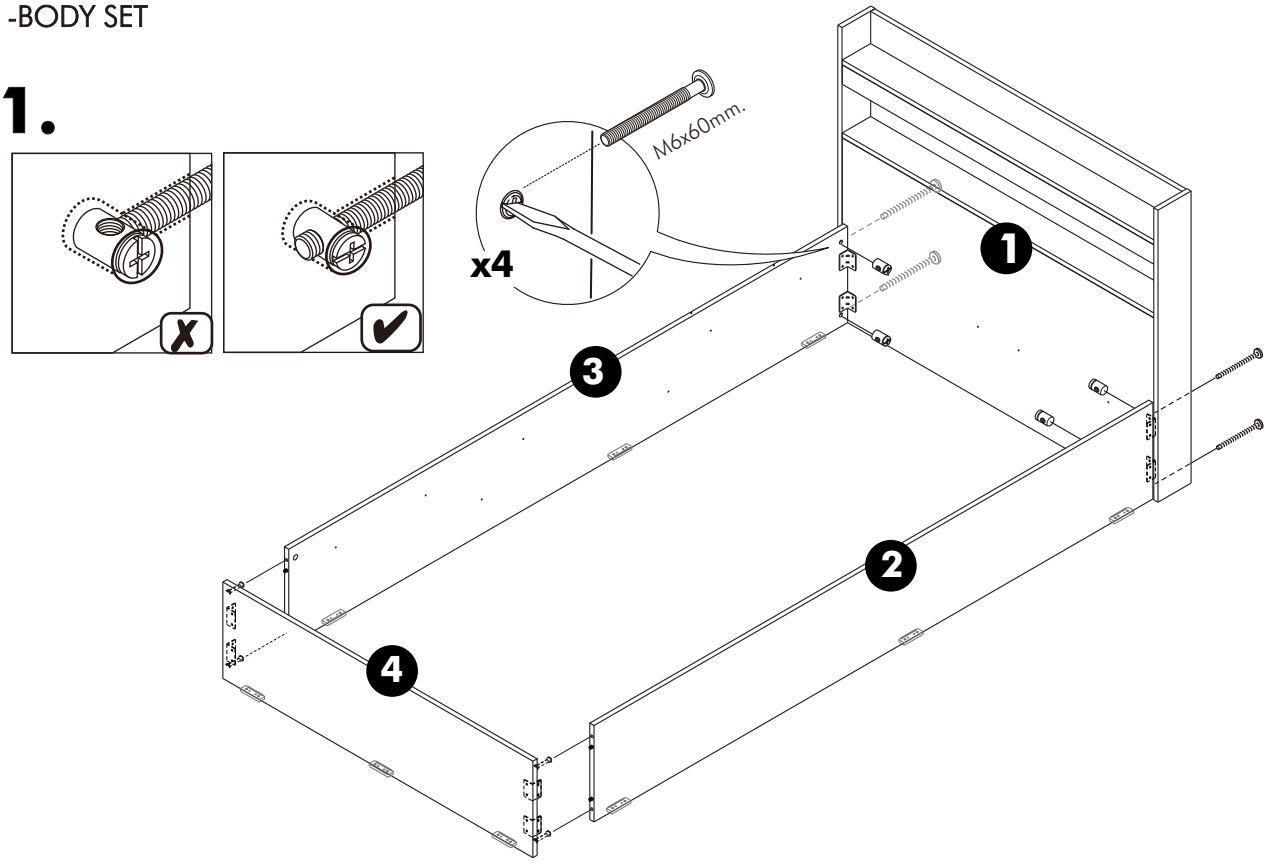

2.

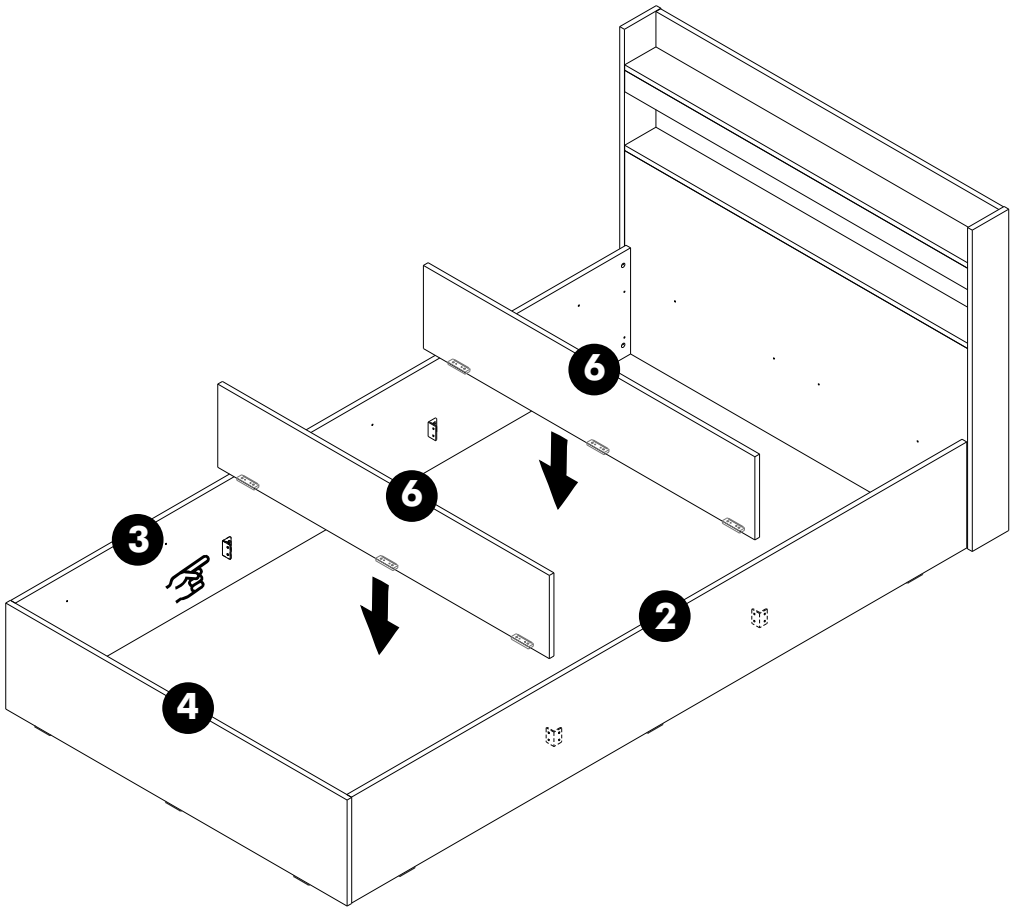

3.

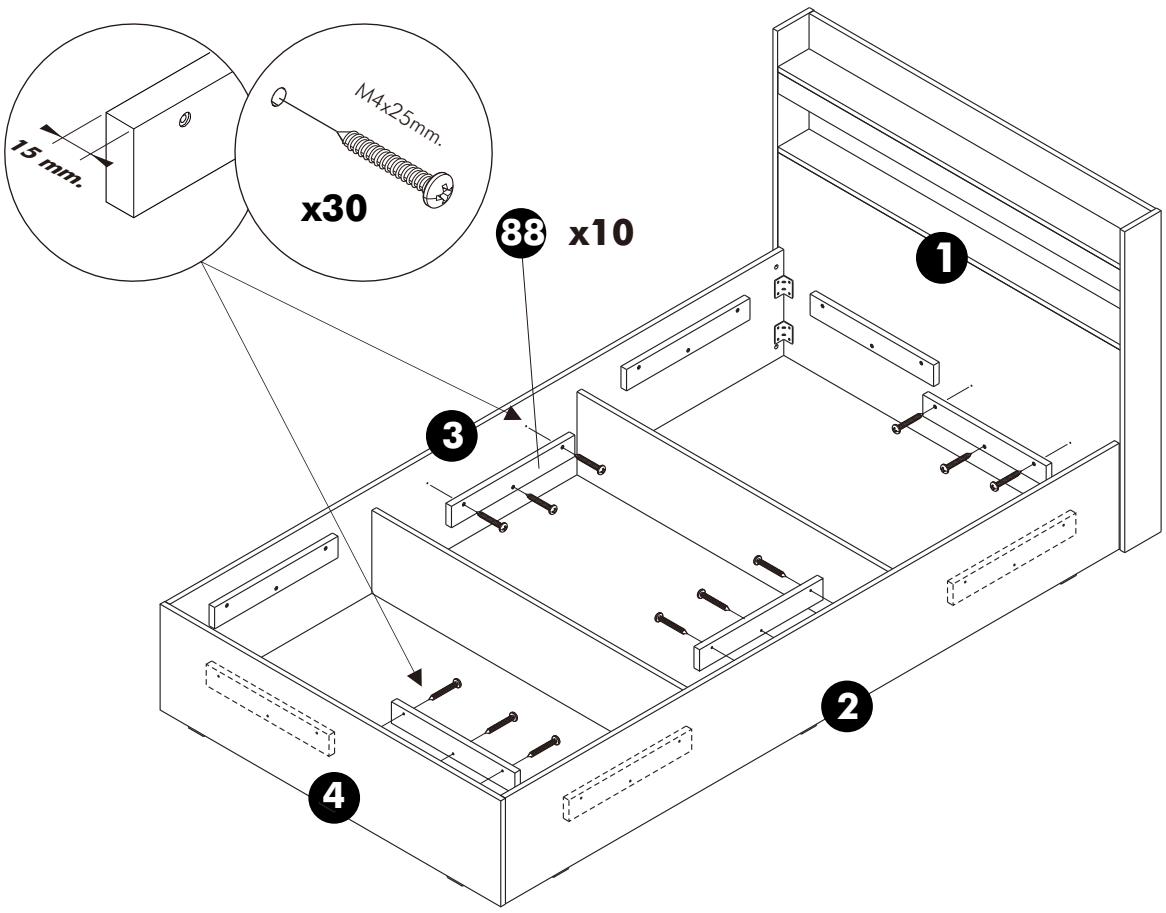

4.

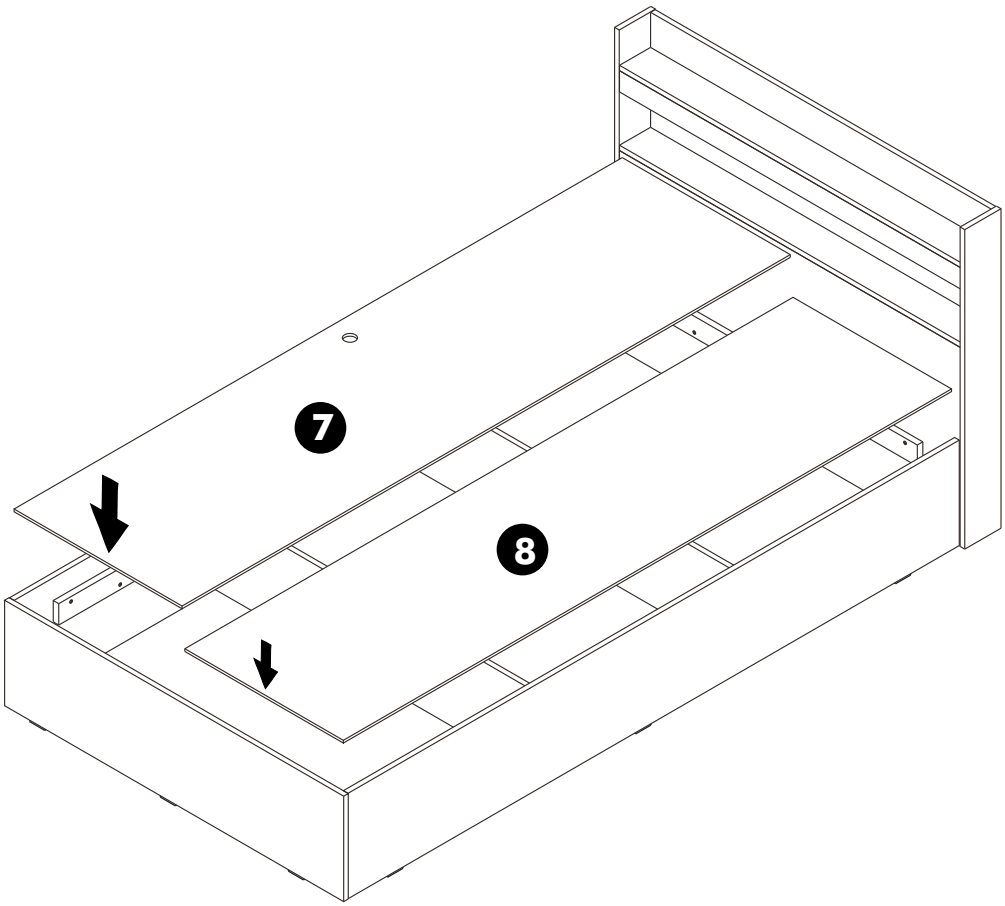

5.

