PJ.ESCENT HATYAI 2

D-BOX BED 160181525 (D3100)

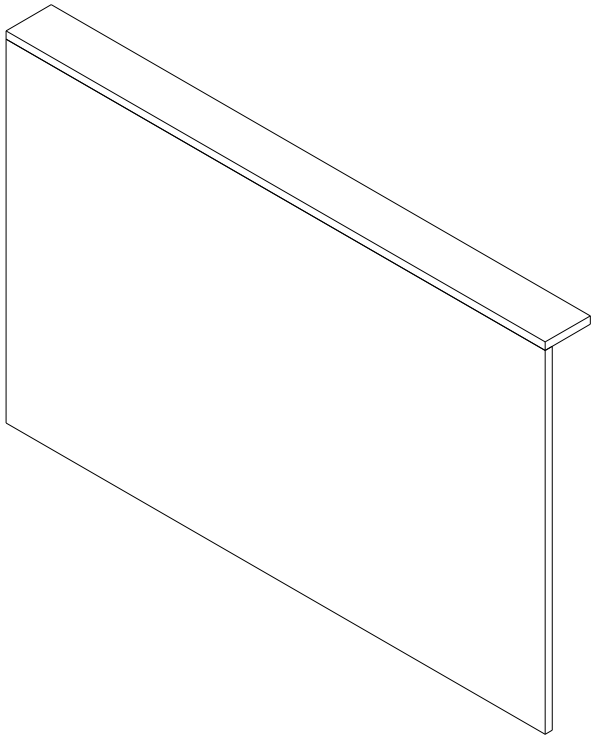

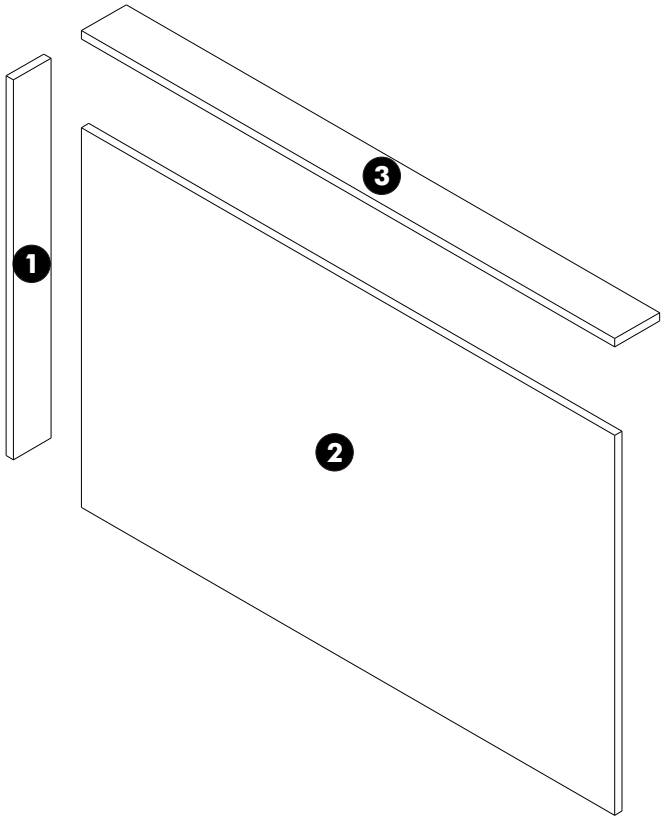

280726-0:160181525