PJ.COBE RATCHADA RAMA9

D-BOX 160170497 (D105)

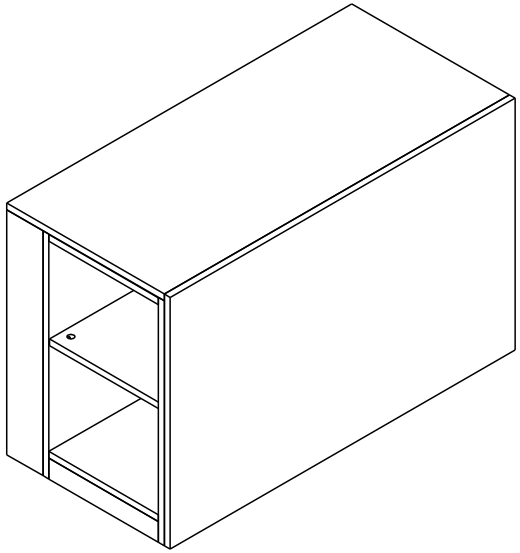

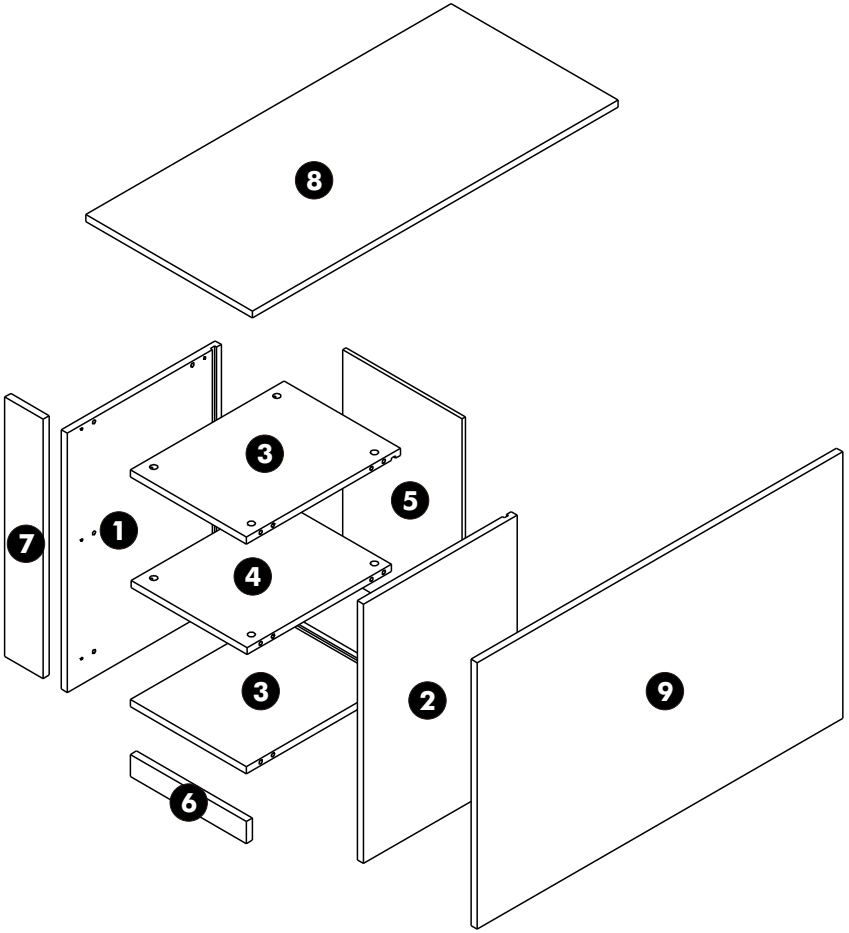

201125-0:160170497