SHISUOKA

SHIZUOKA Divider shelf+Dr 198 cm.

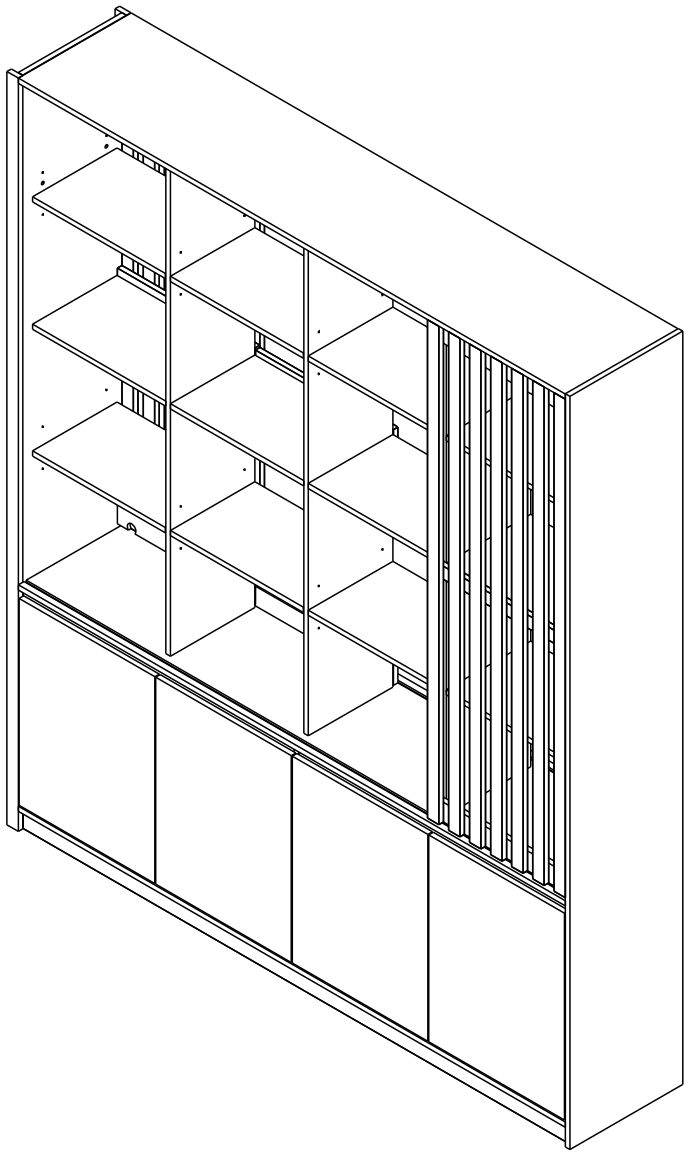

Indexlivingmall

CONNECT SYSTEM

1

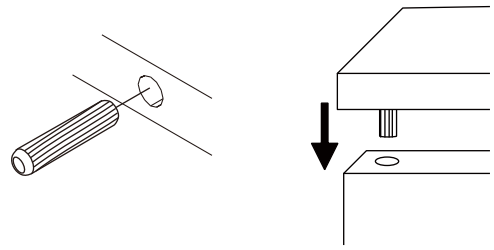

2

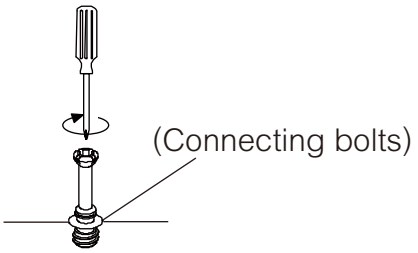

3

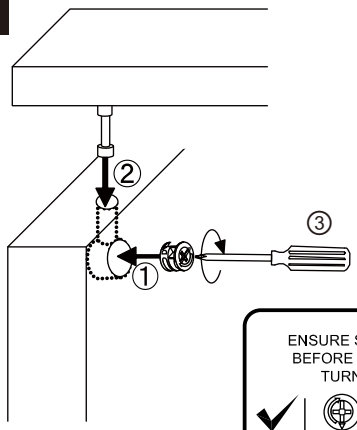

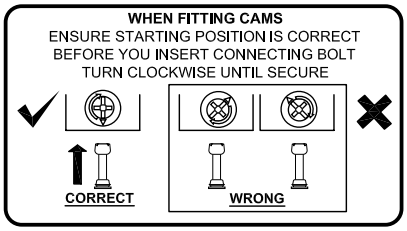

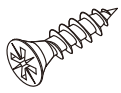

M4x16mm.

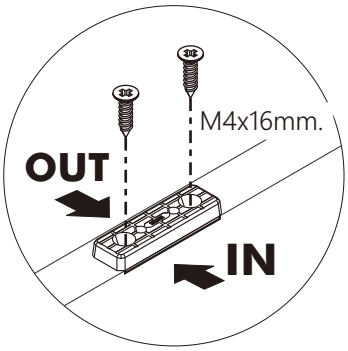

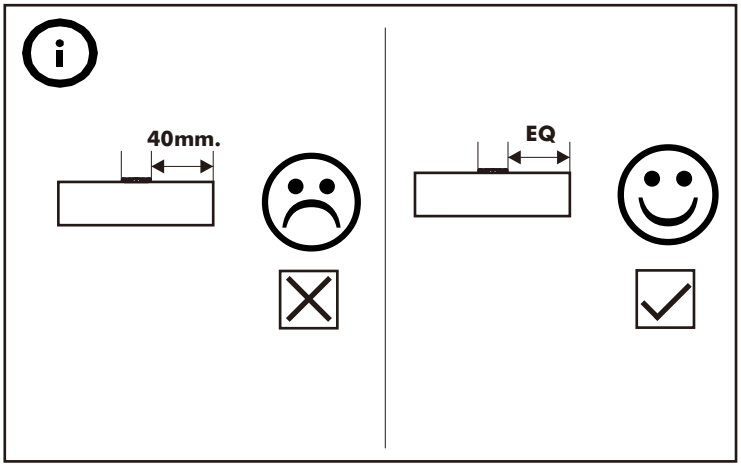



M4x16mm.

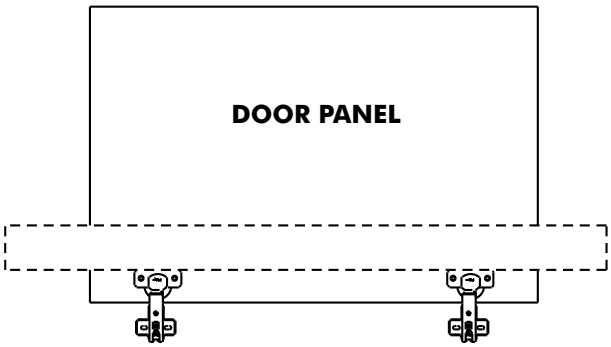

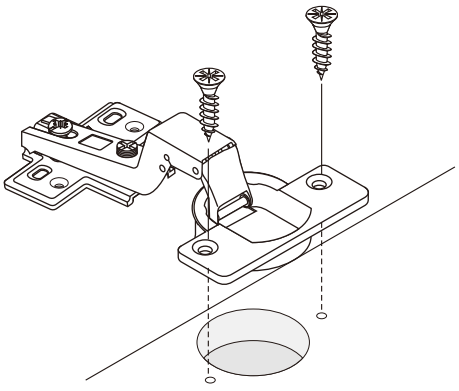

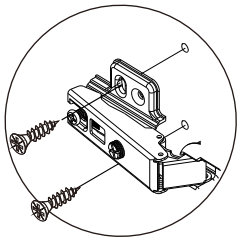

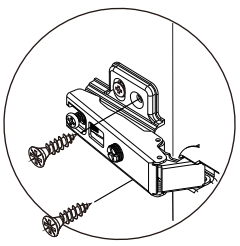

CONNECT SYSTEM

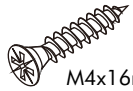

M4x16mm.

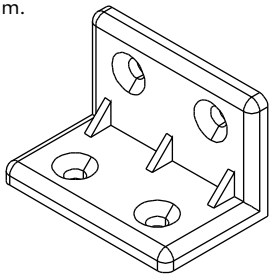

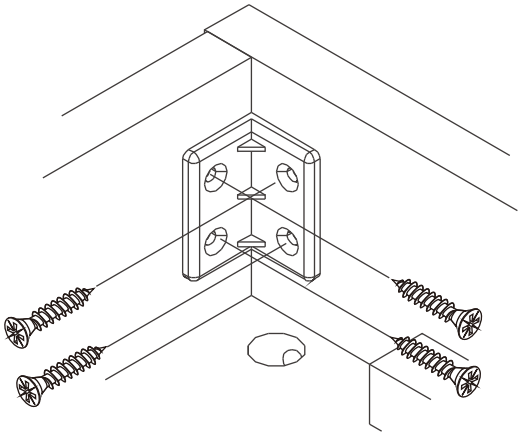

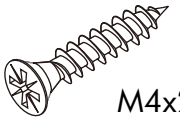

M4x25mm.

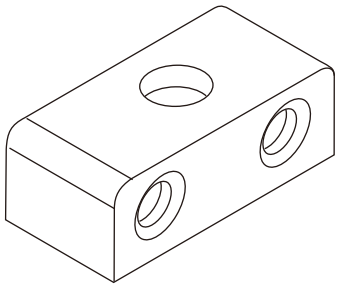

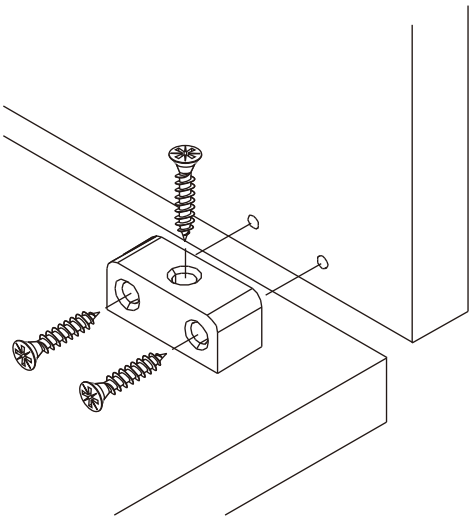

HARDWARE

-BODY SET

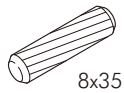
8x35mm.

x 66

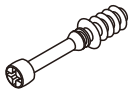

x 34



x 34

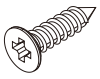
M4x16mm.

x 152

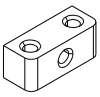

x 2

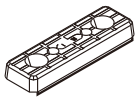

x 20



x 26


∅ 11mm.

x 4

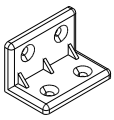

x 28


M4x25mm.

x 6


Mx4x50mm.

x 26


M4x30mm.

x 4

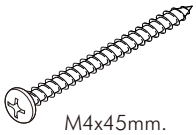
M4x45mm.

x 16

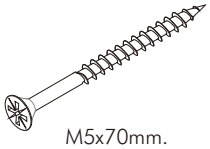
M5x70mm.

x 4

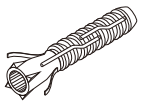

x 4

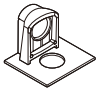

x 48


M4x13mm.

x 48

-DOOR SET

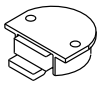

x 4



x 4


6x1/2″

x 8



x 16

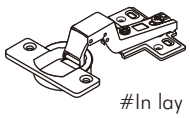
#In lay

x 8

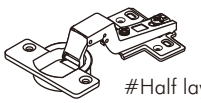
#Half lay

x 8

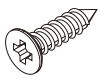
M4x16mm.

x 96

ASSEMBLY

-BODY SET

1.

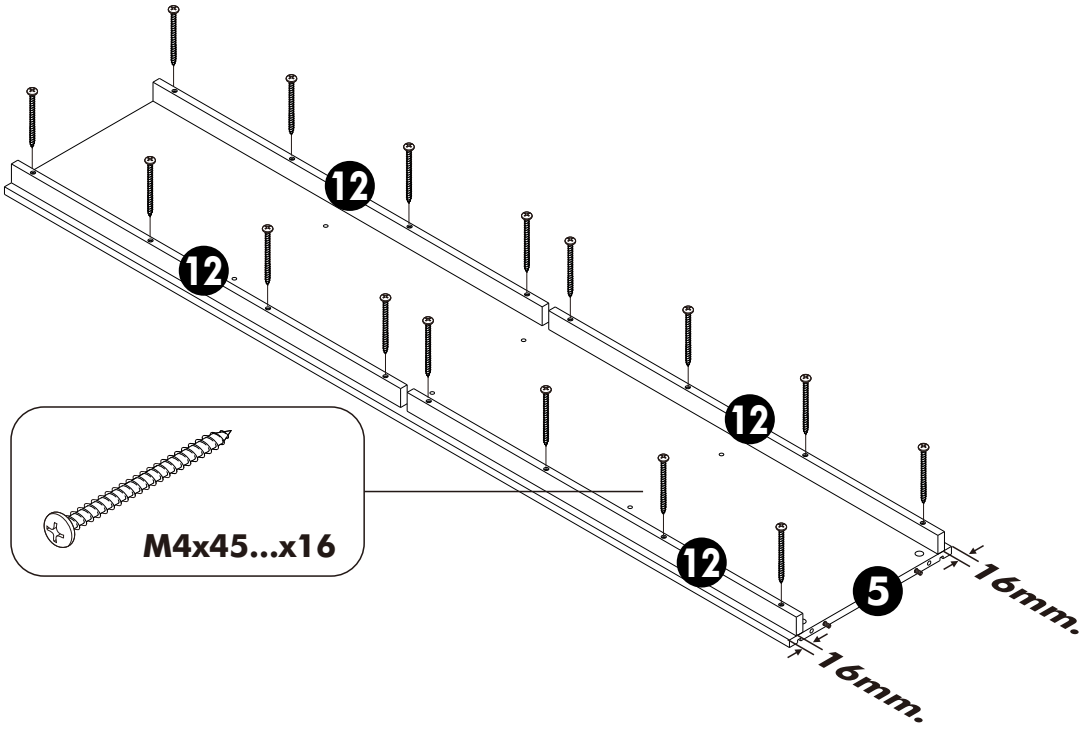

2.

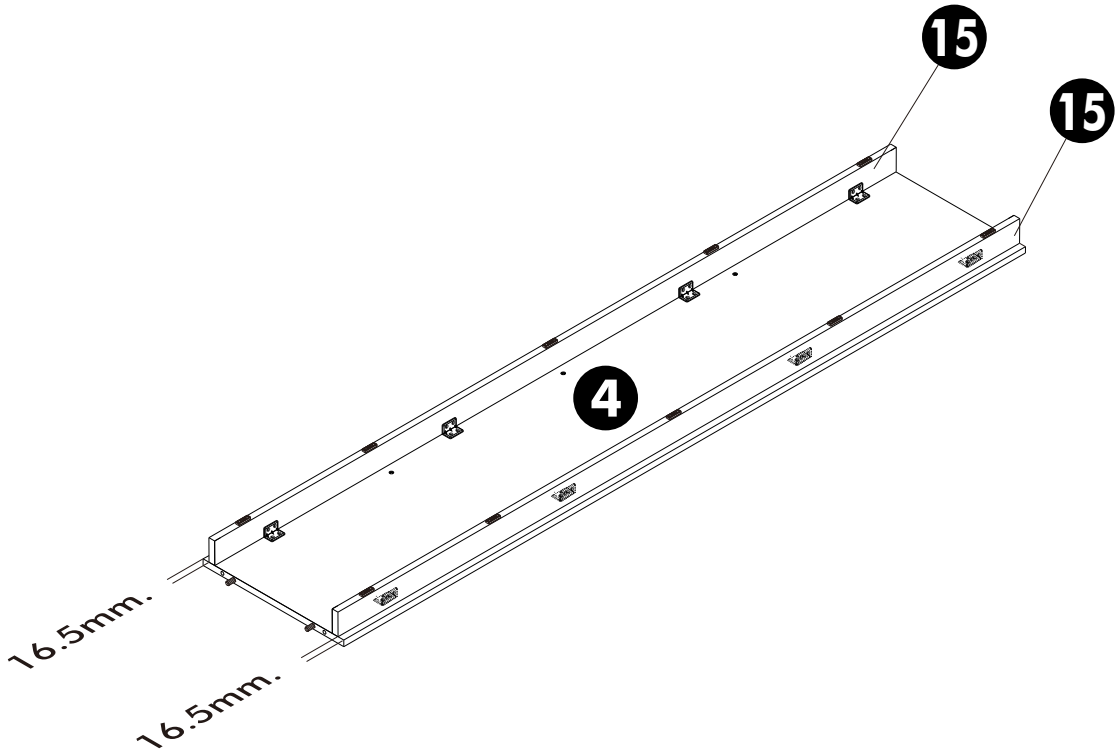

3.

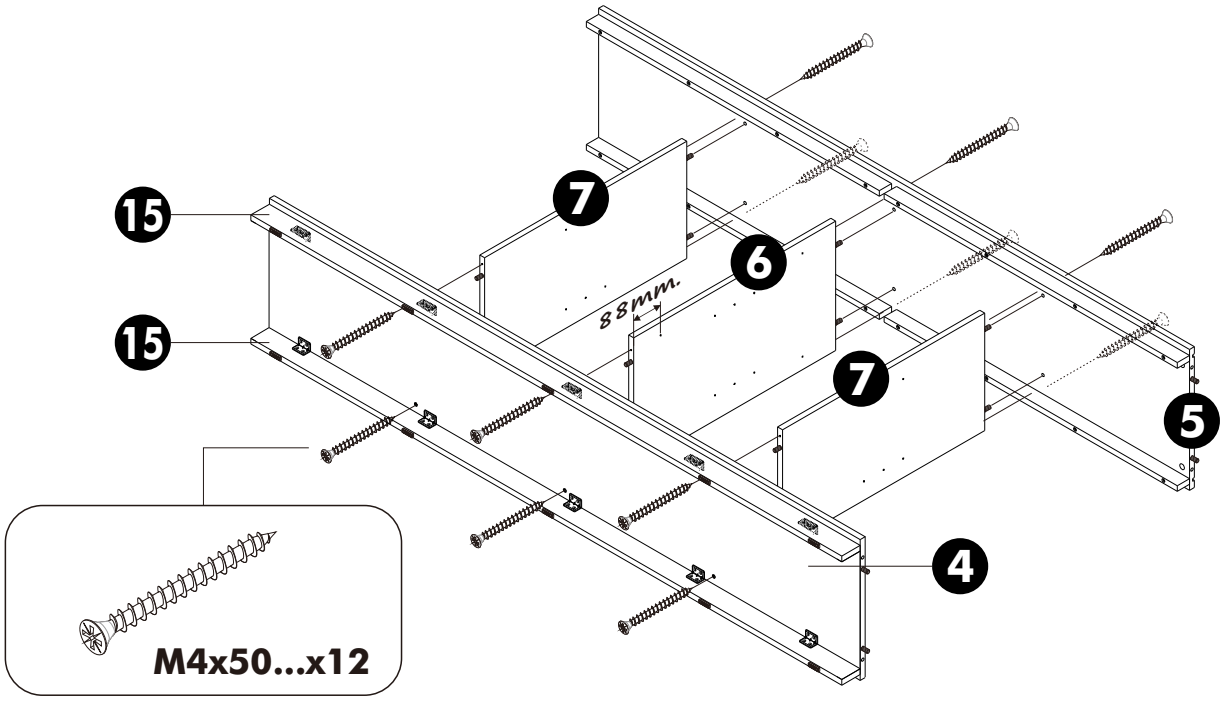

4.

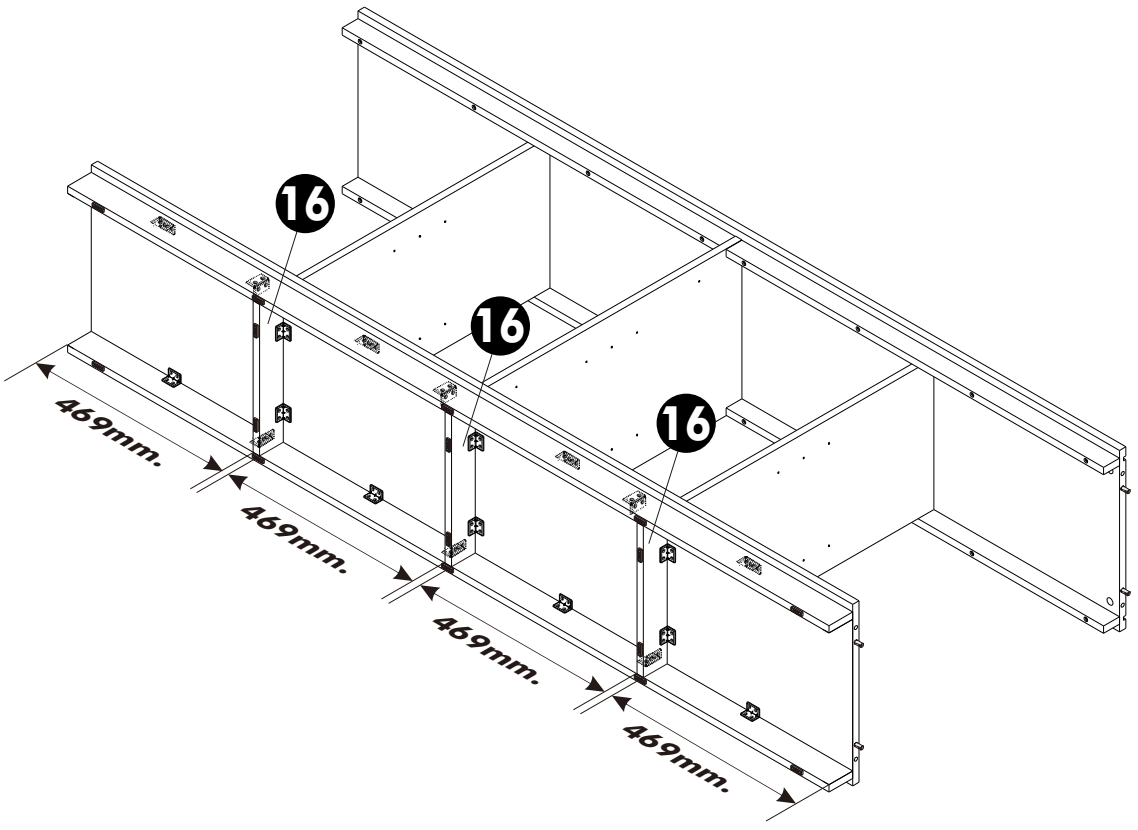

5.

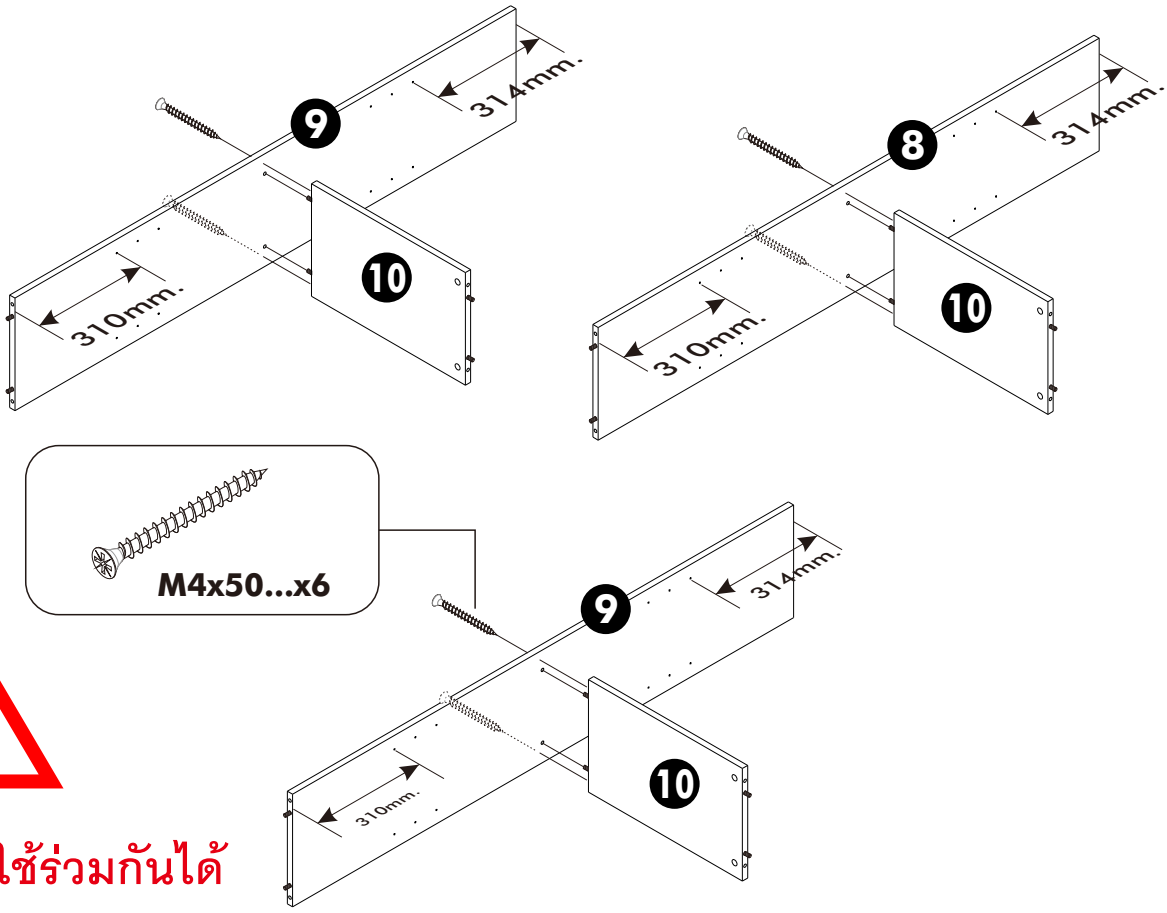

- No.8,No.9 ใช้ร่วมกันได้

6.

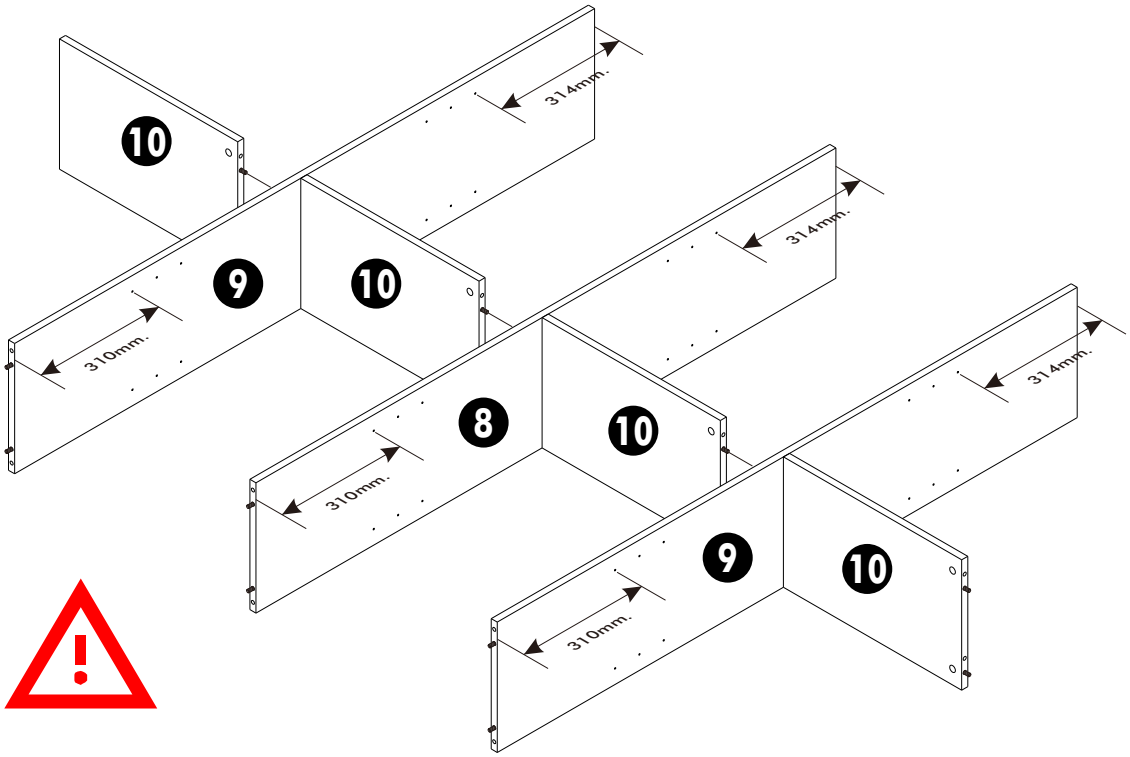

- No.8,No.9 ใช้ร่วมกันได้

7.

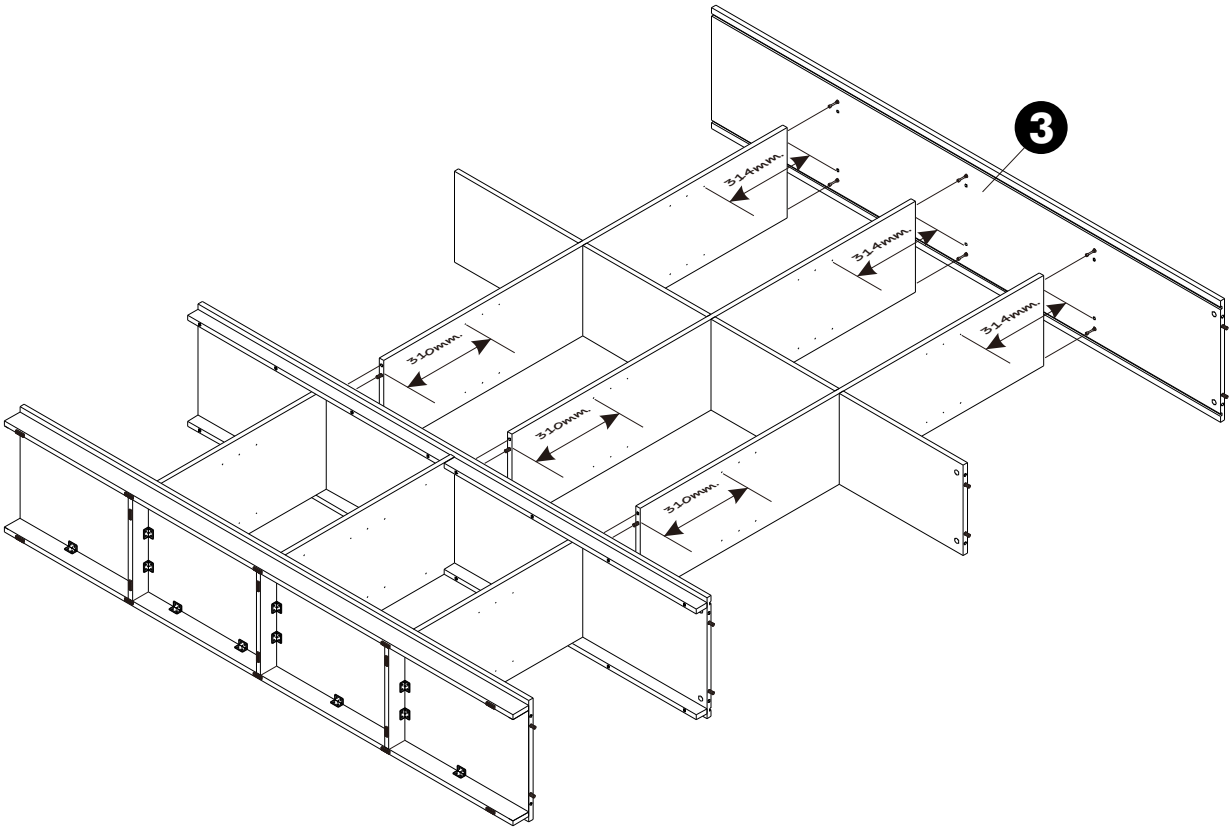

8.

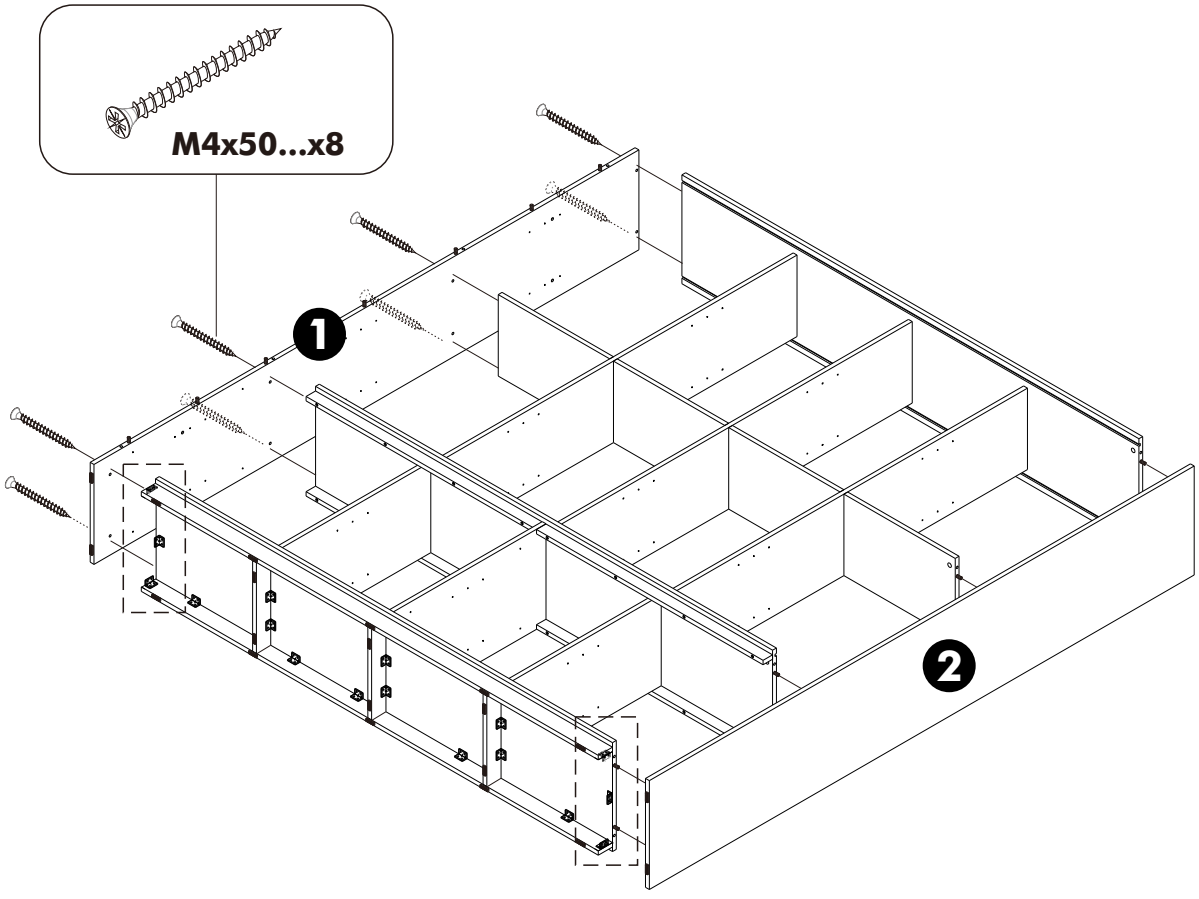

9.

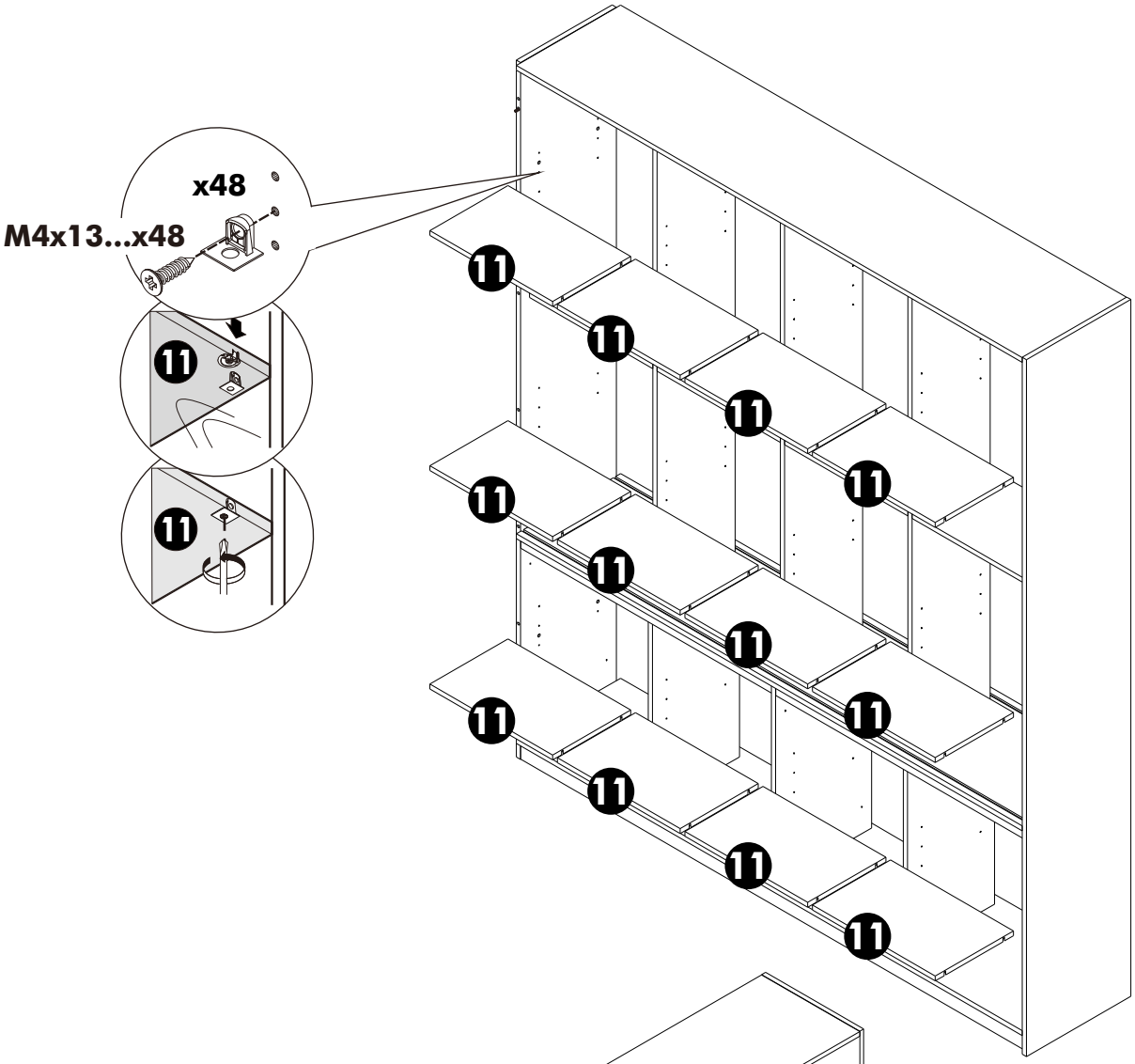

10.

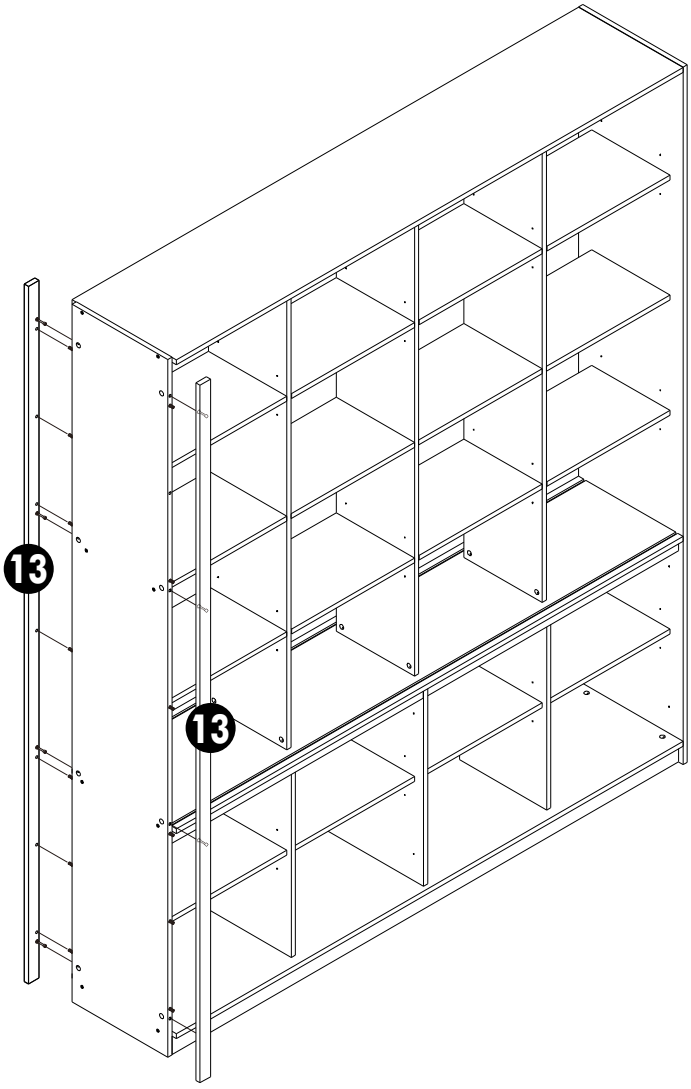

ASSEMBLY

-DOORS SET

1.

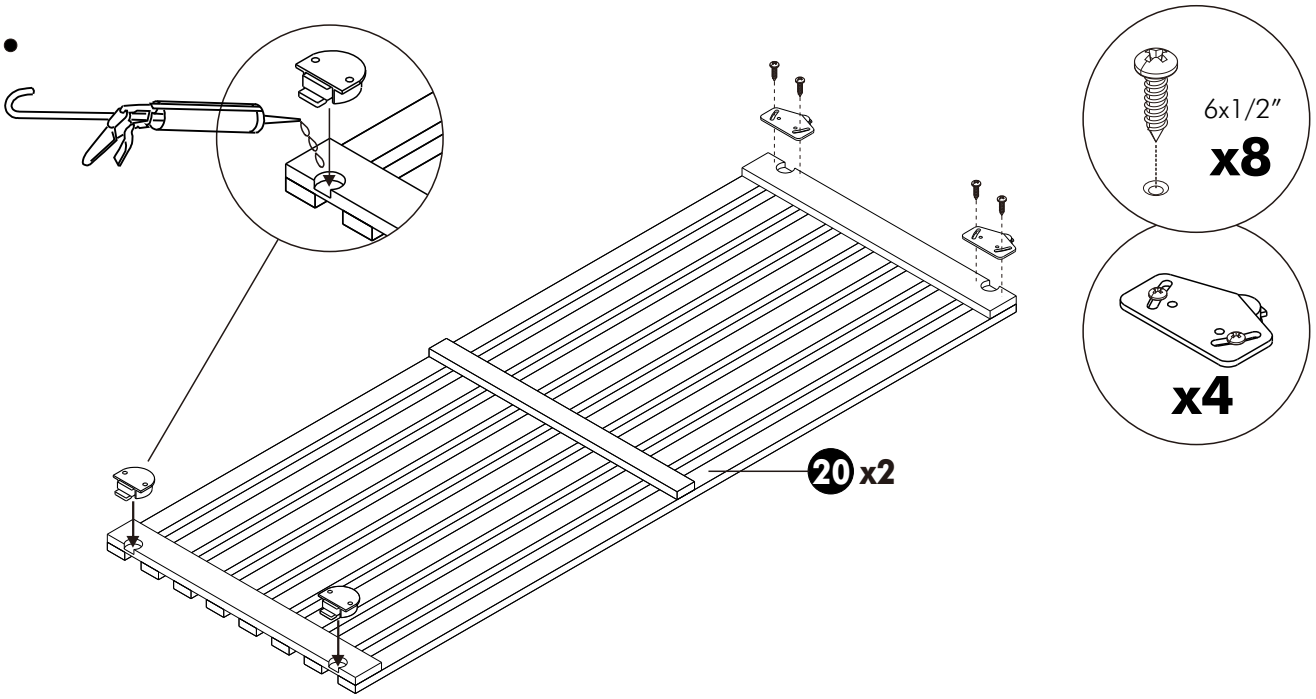

2.

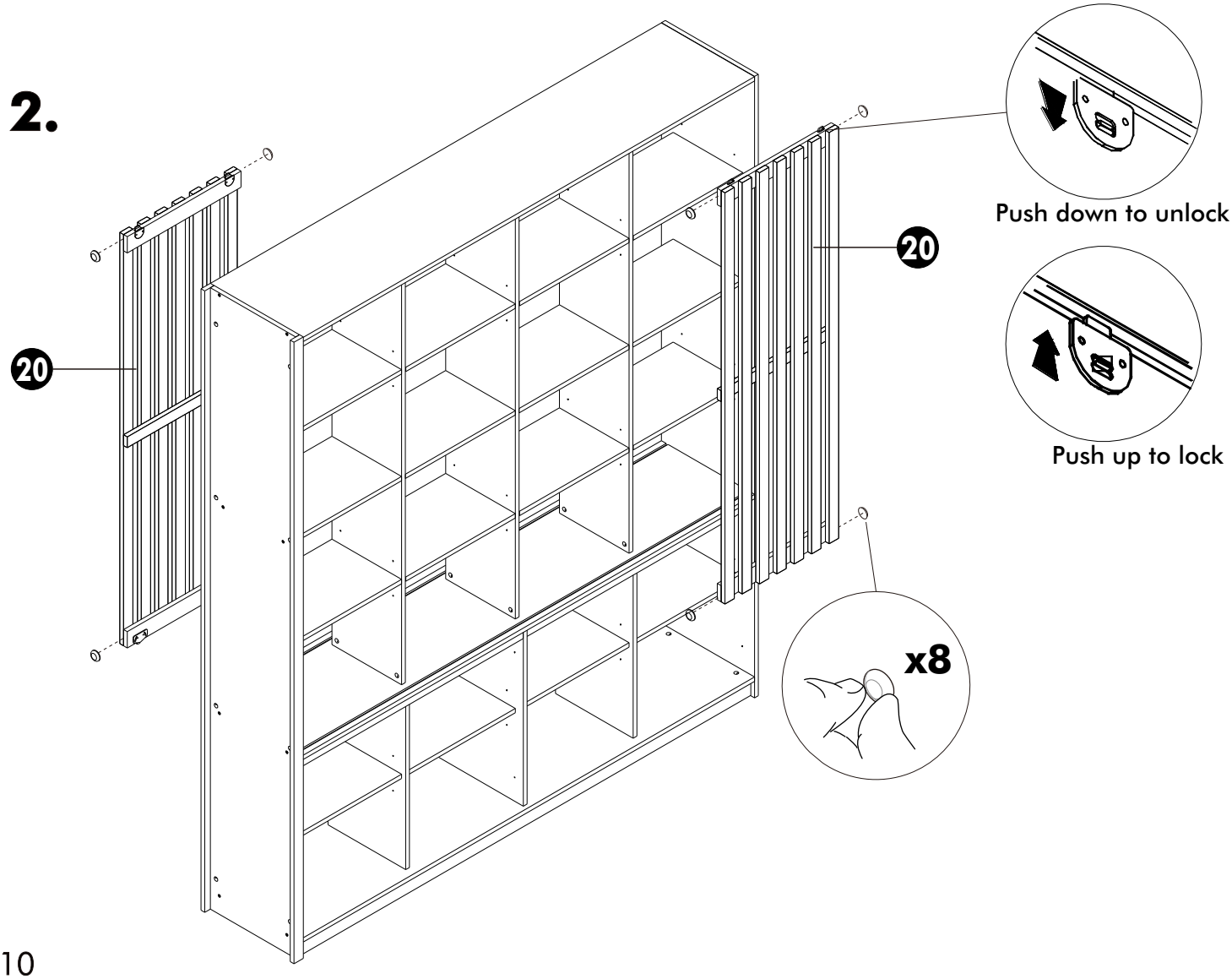

3.

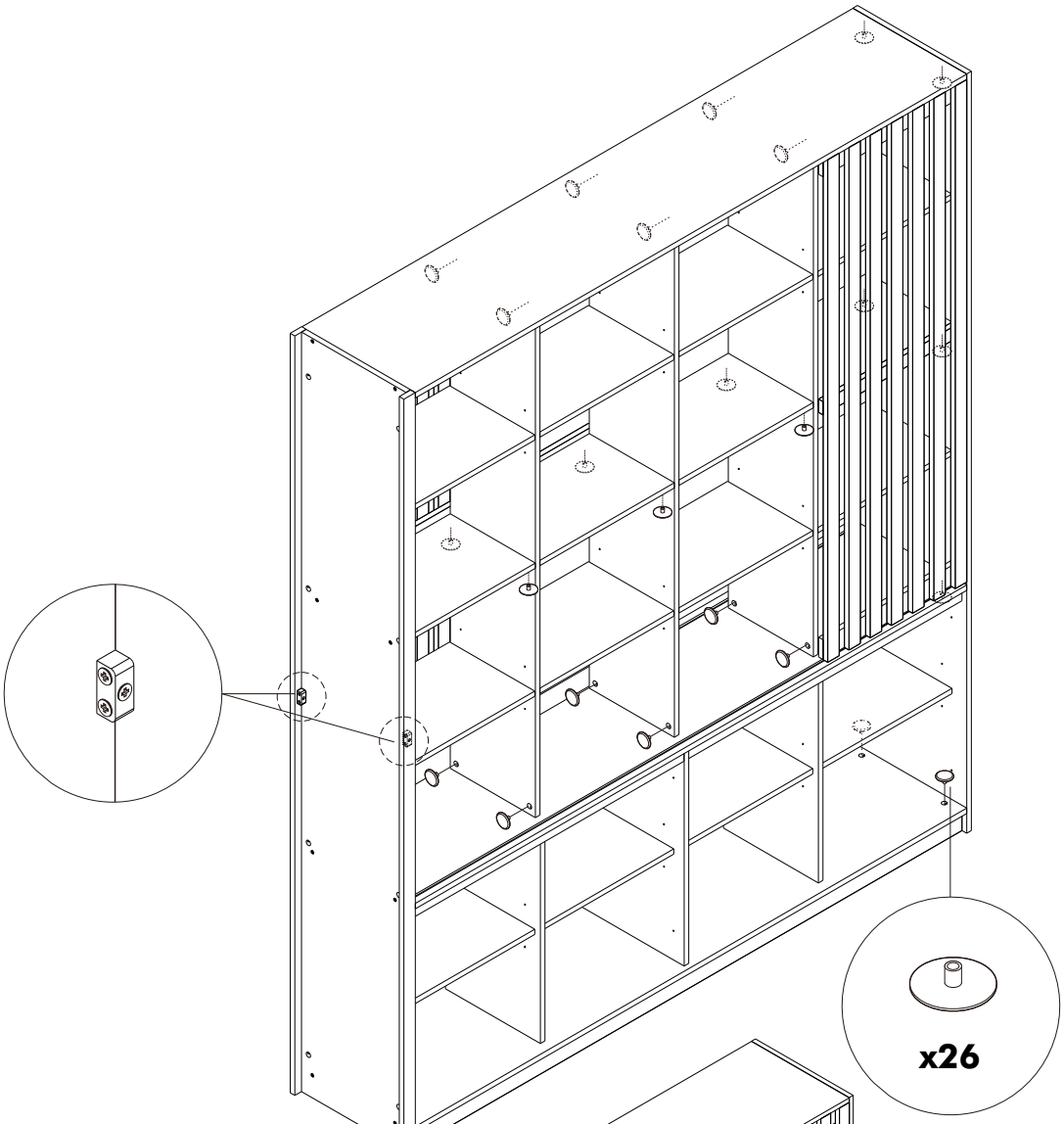

4.

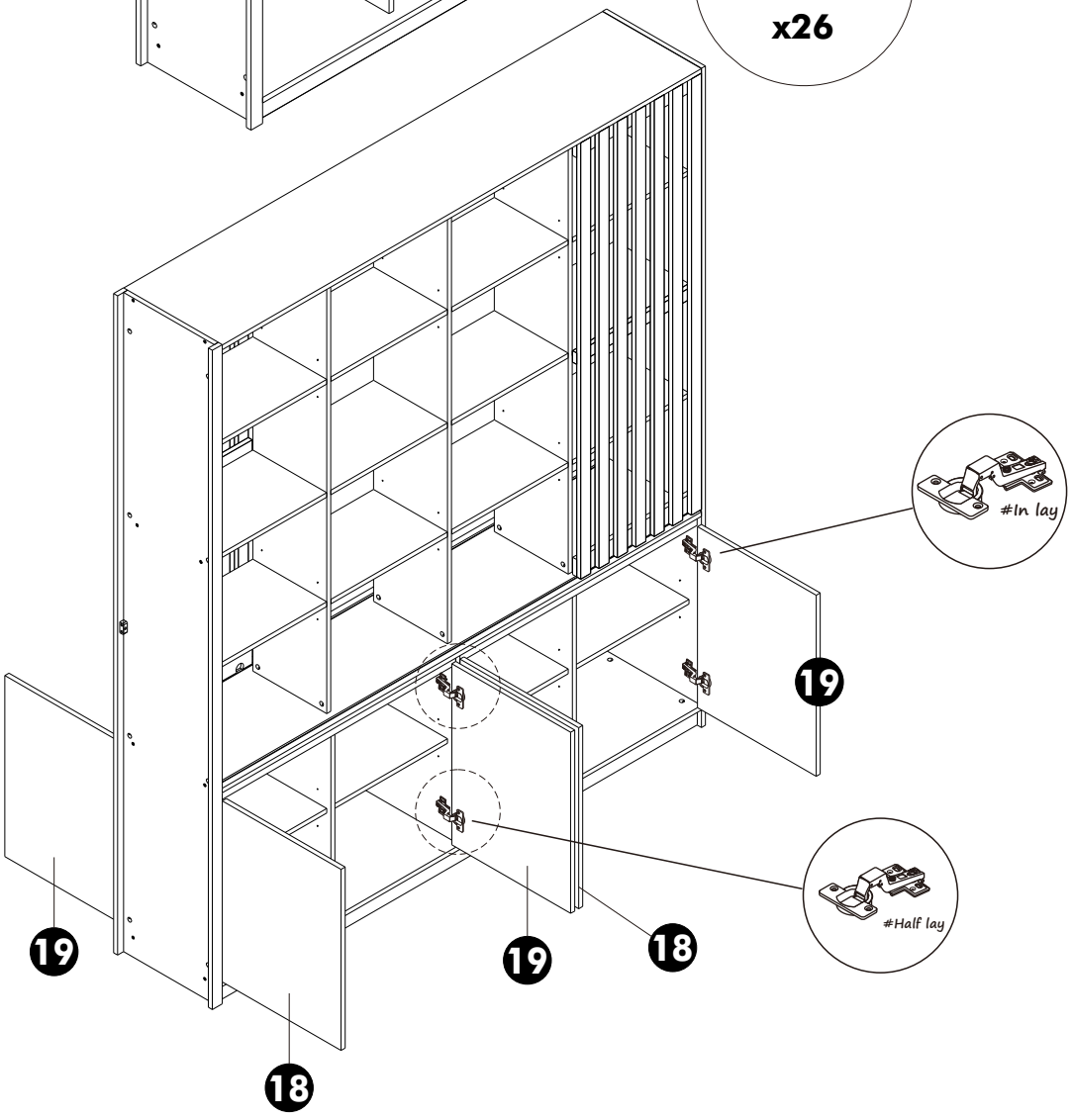

ASSEMBLY

5.

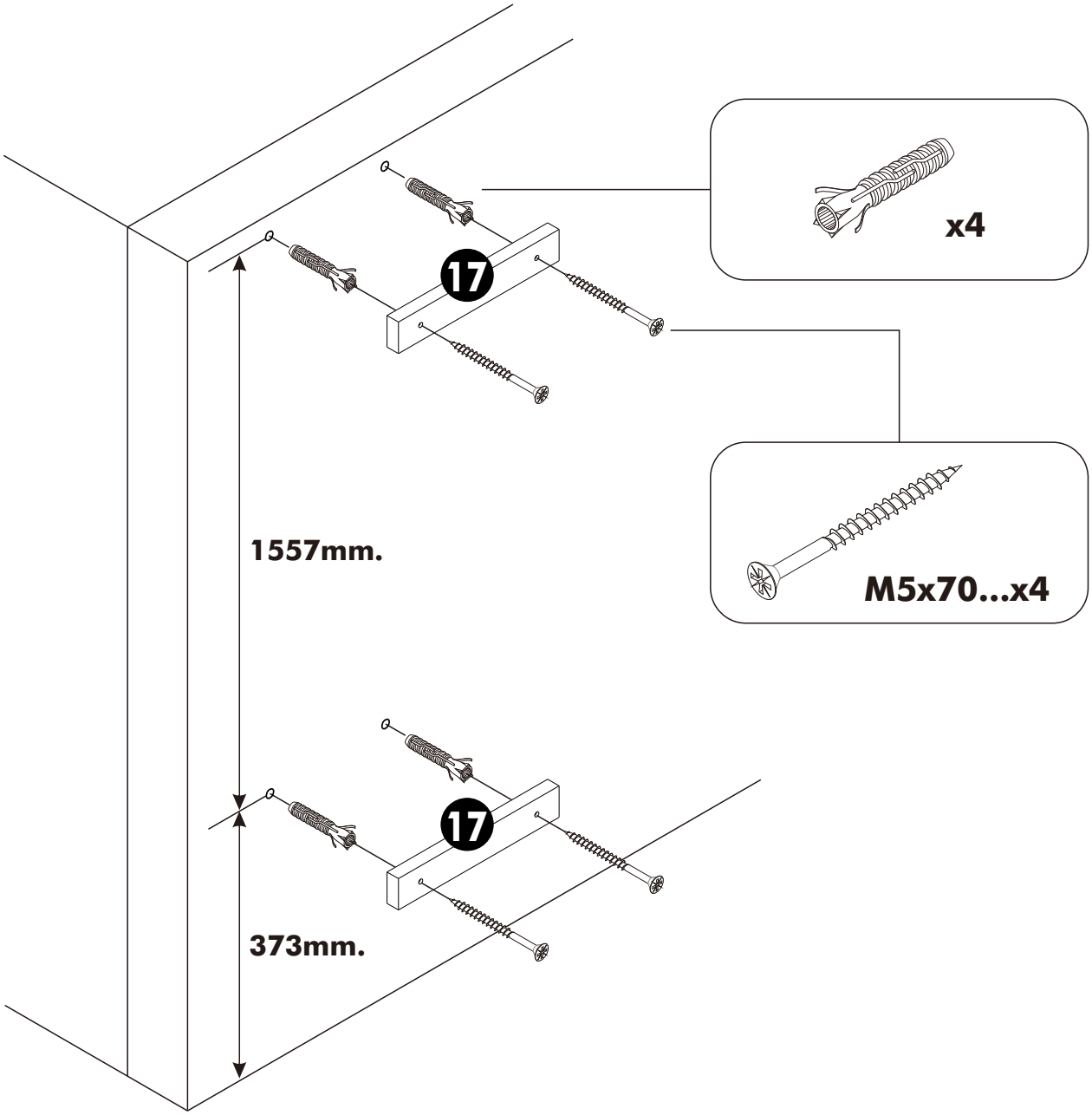

ASSEMBLY

6.

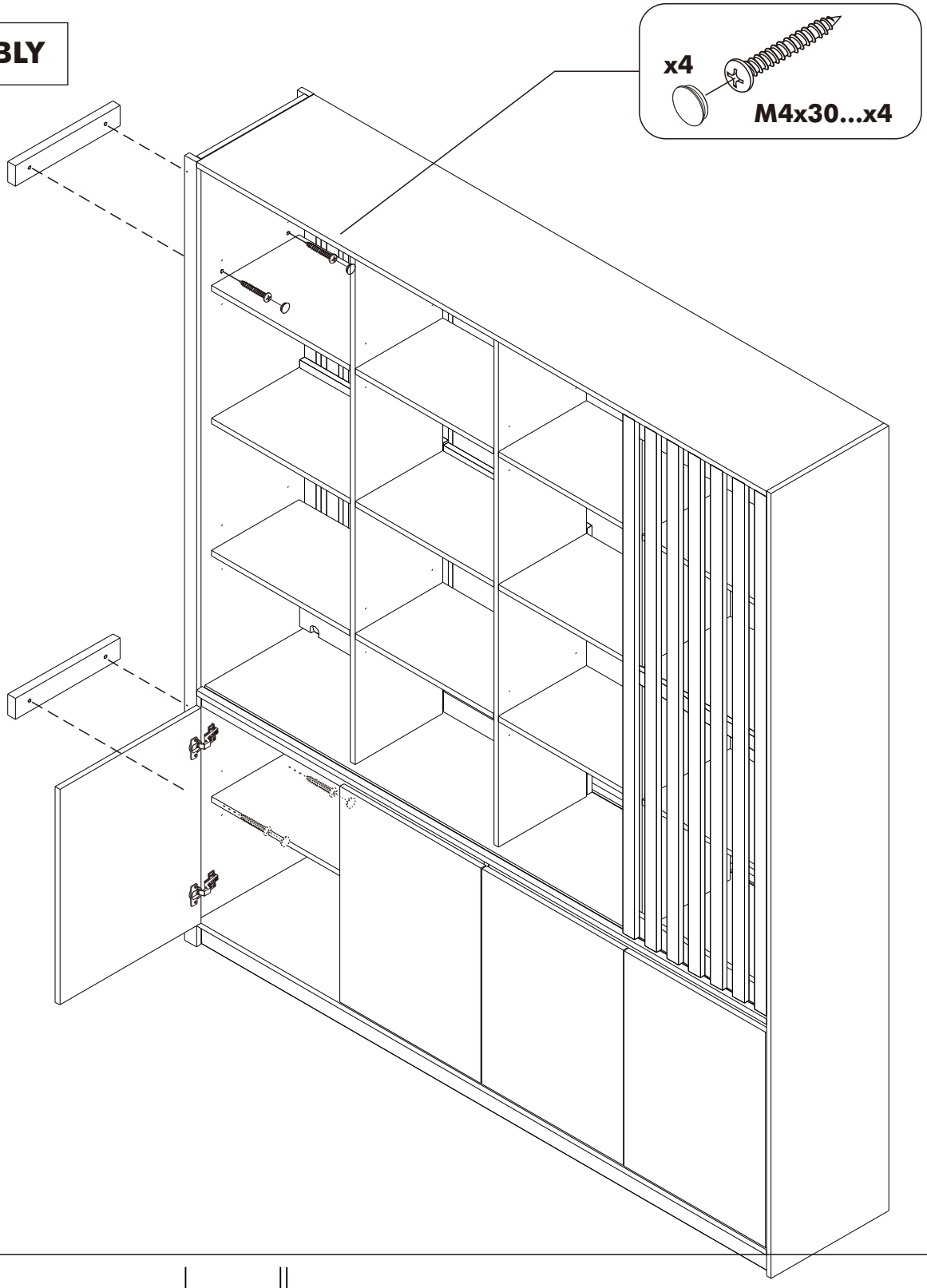

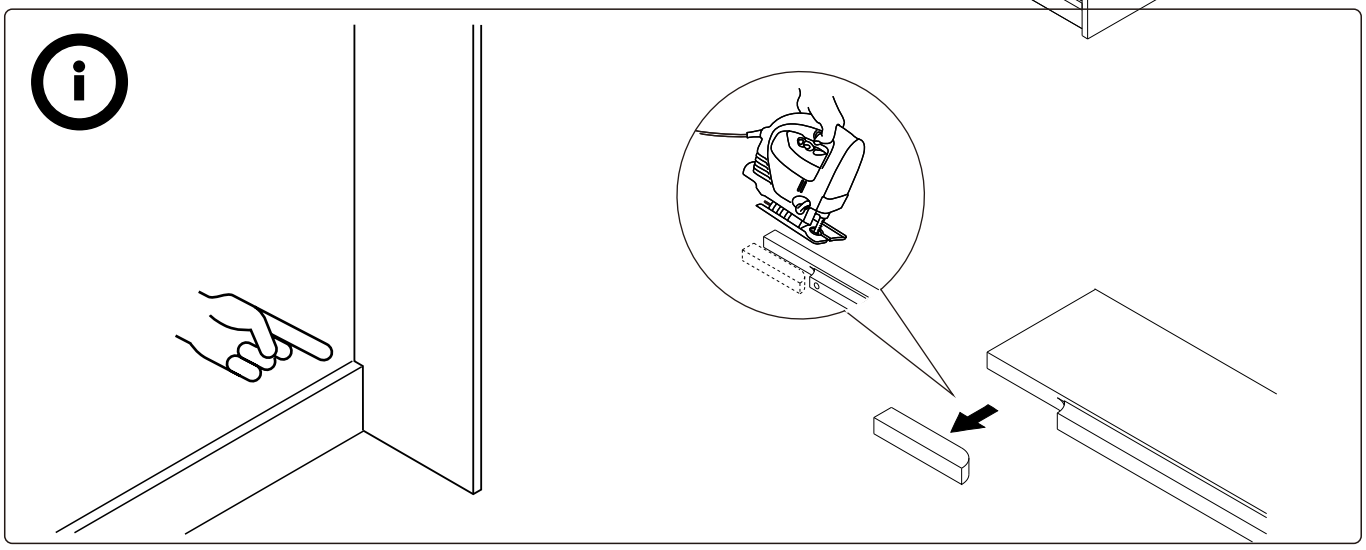

250726-04 120026440