SHIBUYA

Home entertainment 3.2M.

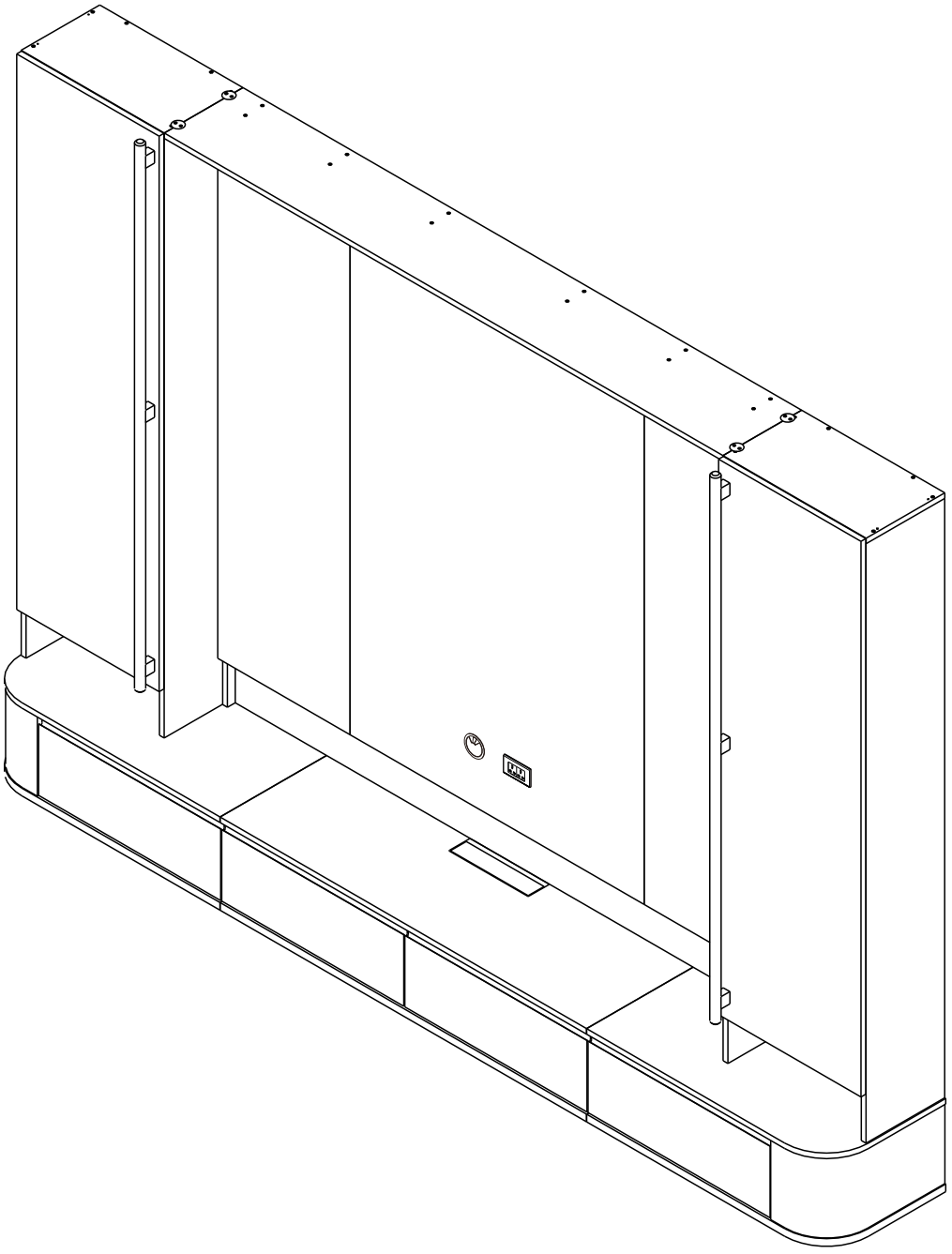

Indexlivingmall

CONNECT SYSTEM

1

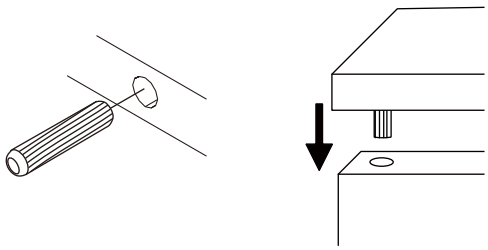

2

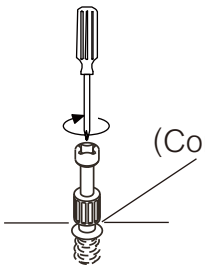

3

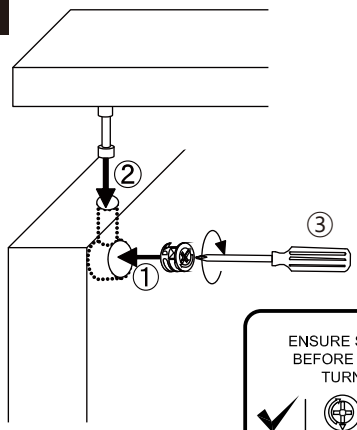

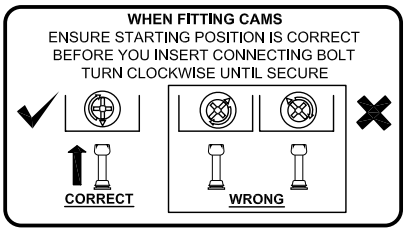

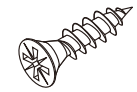

M4x16mm.

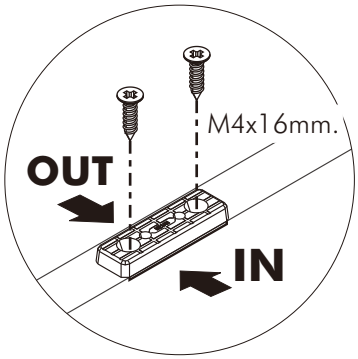

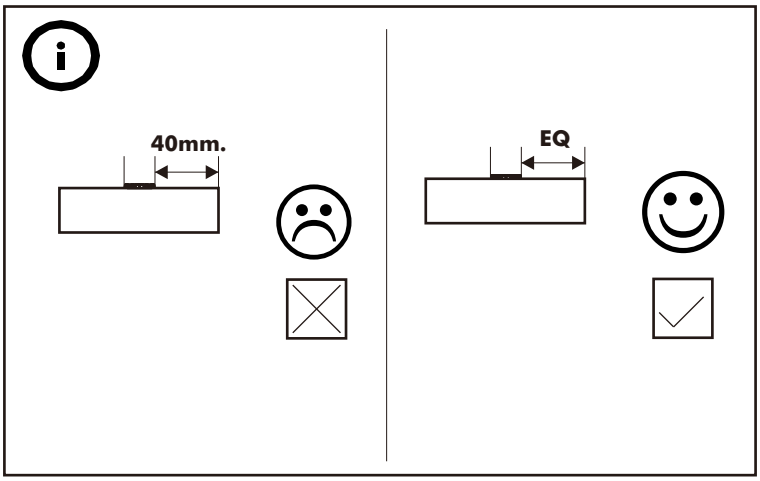



M4x16mm.

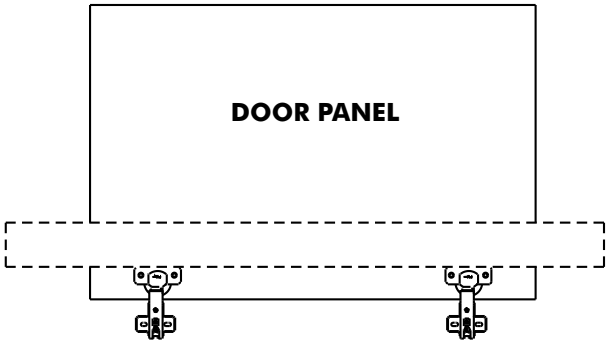

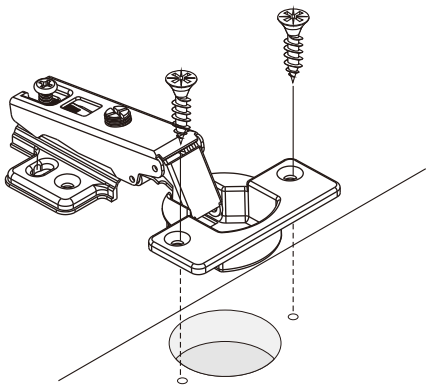

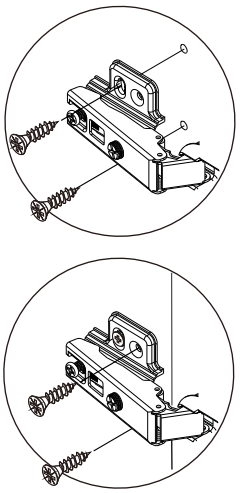

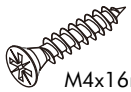

M4x16mm.

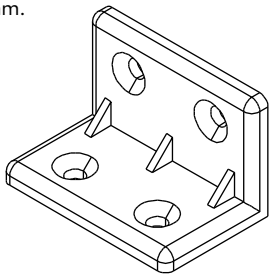

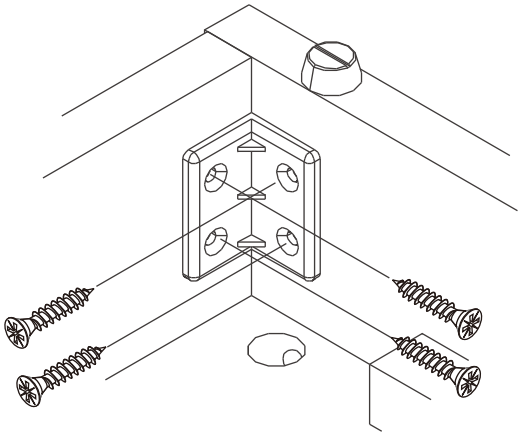



M3.5x20mm.

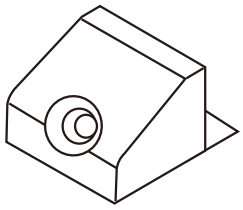

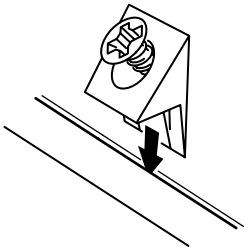

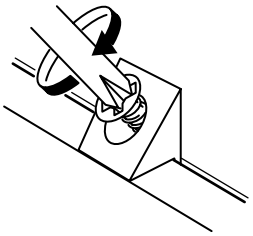



M3.5x20mm.

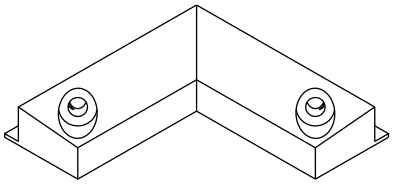

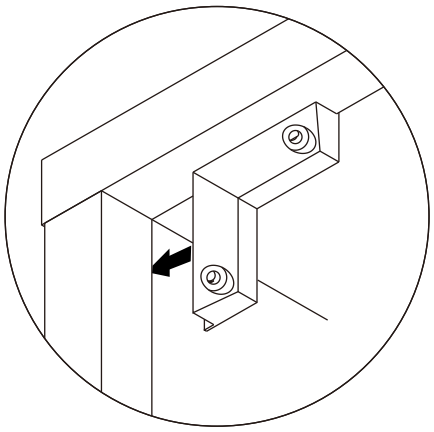

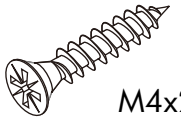

M4x25mm.

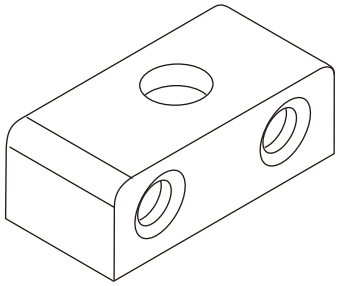

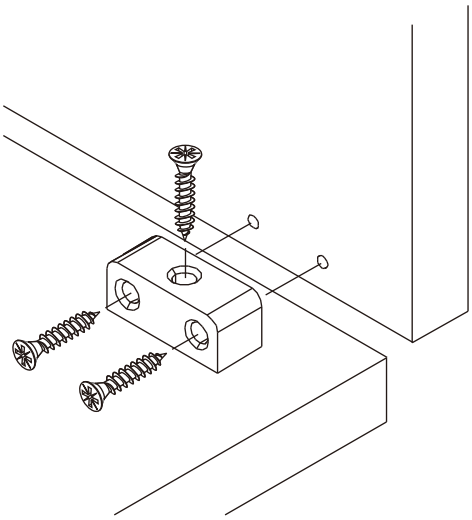



M3.5x20mm.

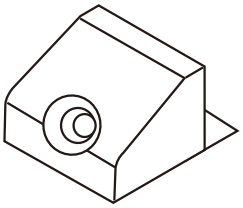

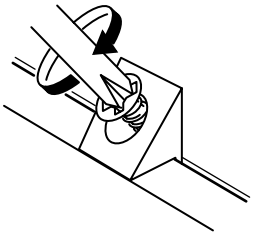

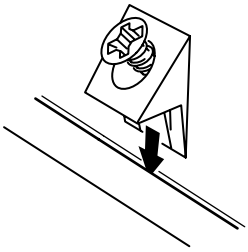

HARDWARE

-BODY SET

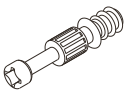

x 48



(#19)

x 40



(#15)

x 8

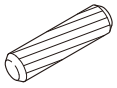

x 114

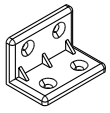

x 78



x 32

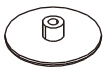

x 8



11mm.

x 48

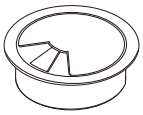

x 1

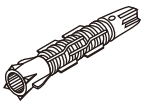

x 22

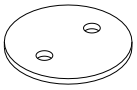

x 4

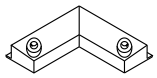

x 8

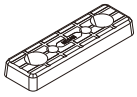

x 36

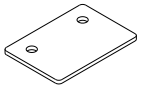

x 2



x 32



x 8



M4x16mm.

x 392

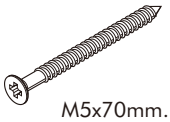

M5x70mm.

x 22

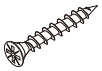

M3.5x20mm.

x 48

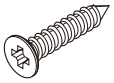

M4x20mm.

x 12

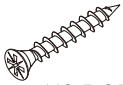

M3.5x25mm.

x 24



M4x30mm.

x 66



M4x50mm.

x 42

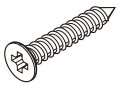

M4x25mm.

x 12



M3.5x13mm.

x 4

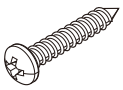

M4x20mm.

x 4

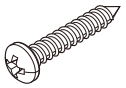

M4x35mm.

x 6



M4x16mm.

x 16

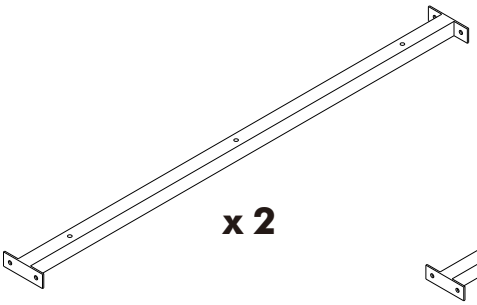

x 2

x 1

-DRAWER SET

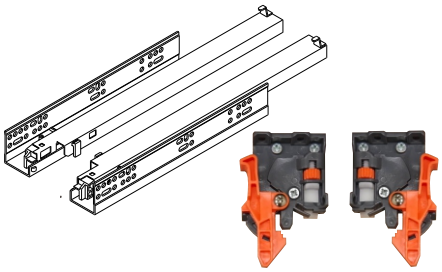

x 4



M3.5x13mm.

x 32

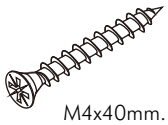

M4x40mm.

x 40



M6x30mm.

x 20

-DOOR SET

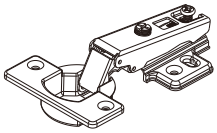

x 8



M4x16mm.

x 48



x 4

-LAMP SET

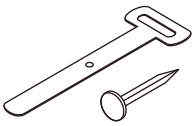

x 20/20



5x3/4"mm.

x 5

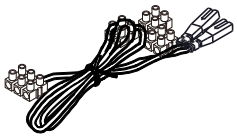

x 1



x 1



M4x16mm.

x 4

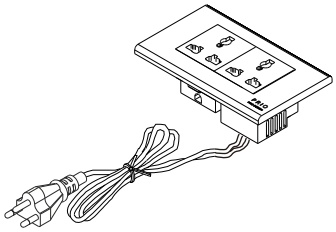

x 1

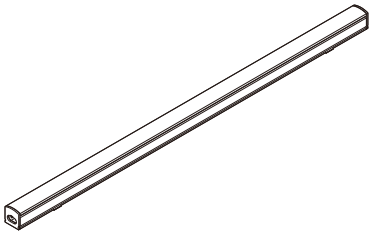

x 2

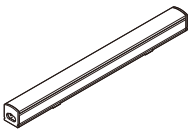

x 2

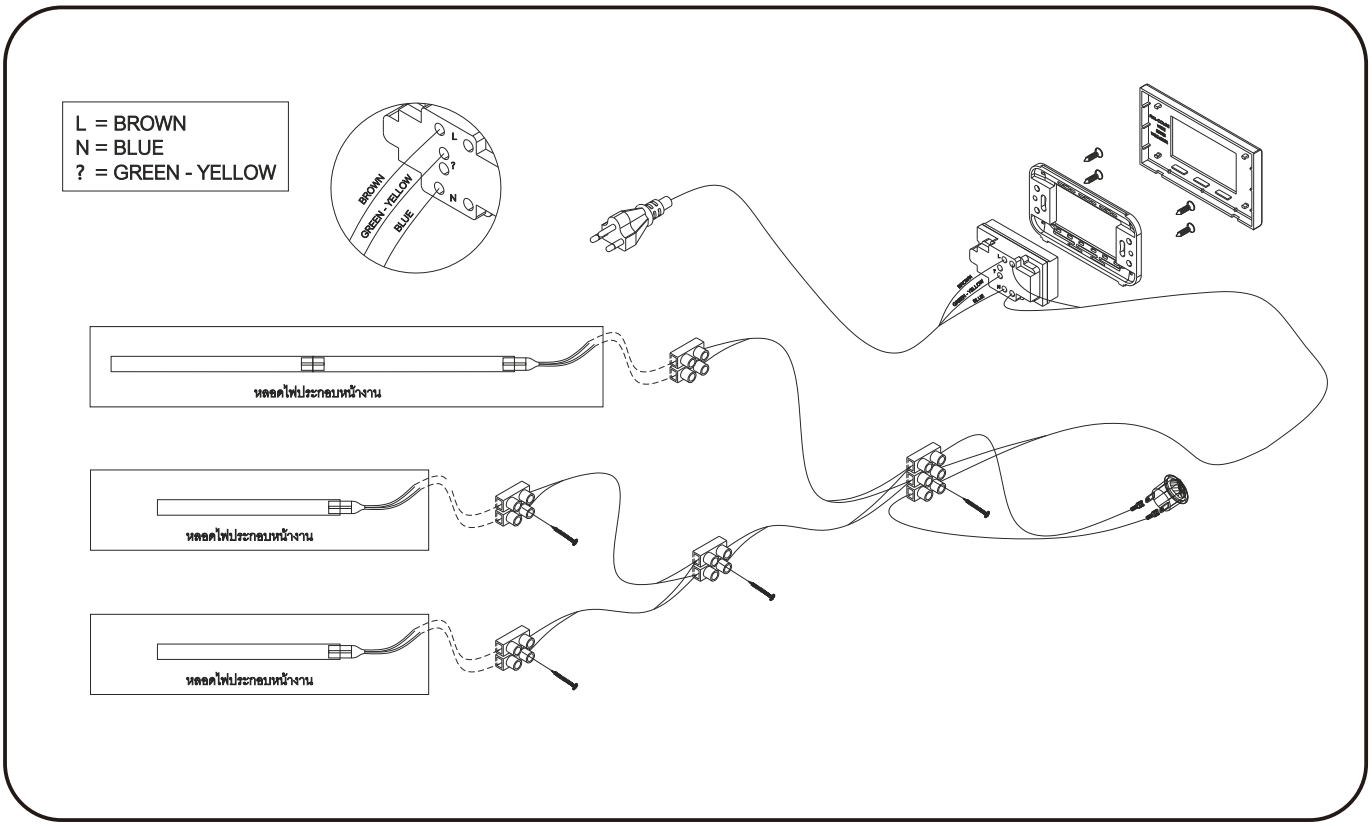

ASSEMBLY

-BODY SET

1.

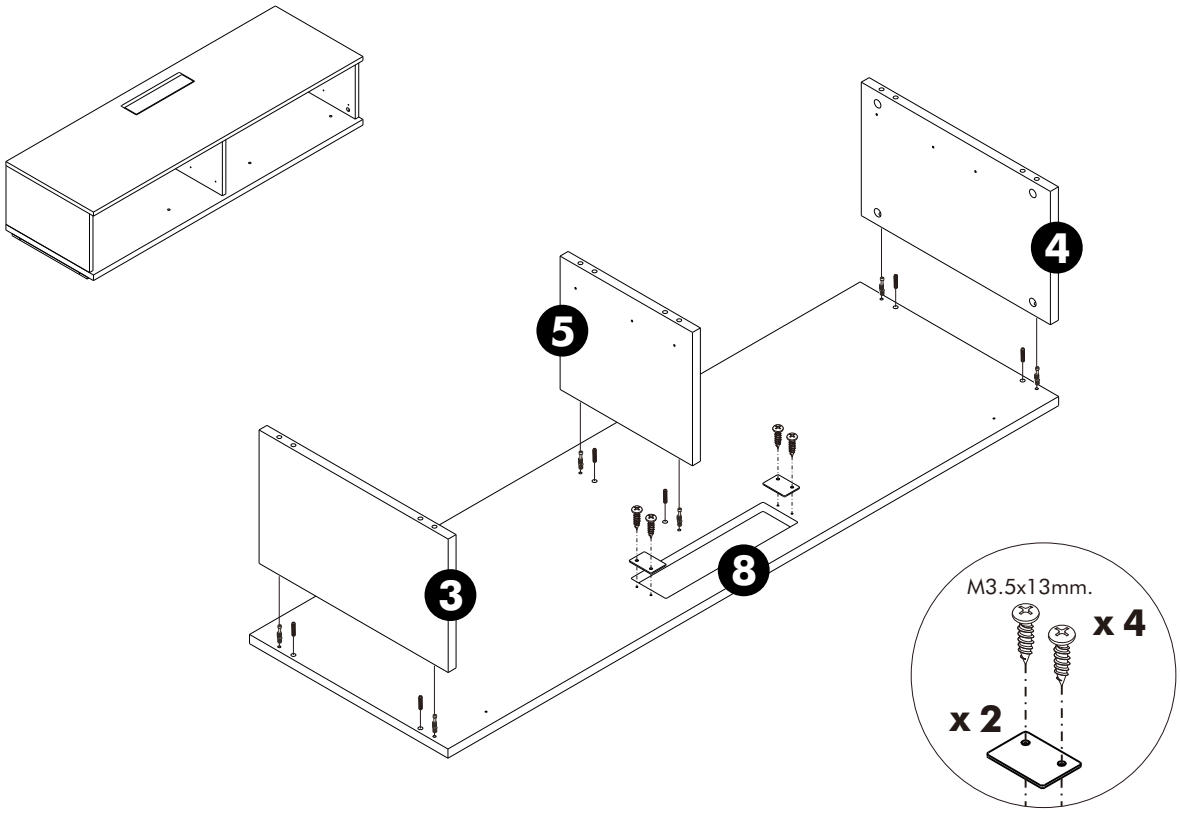

2.

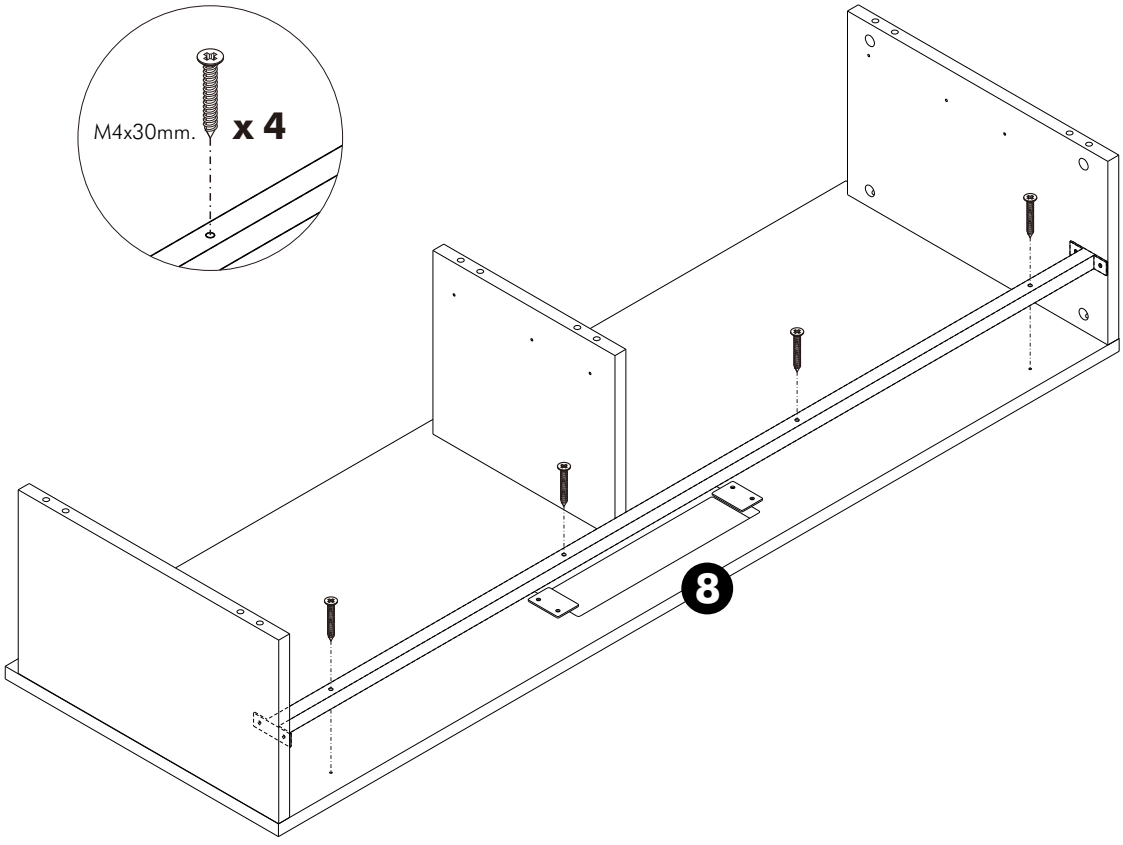

3.

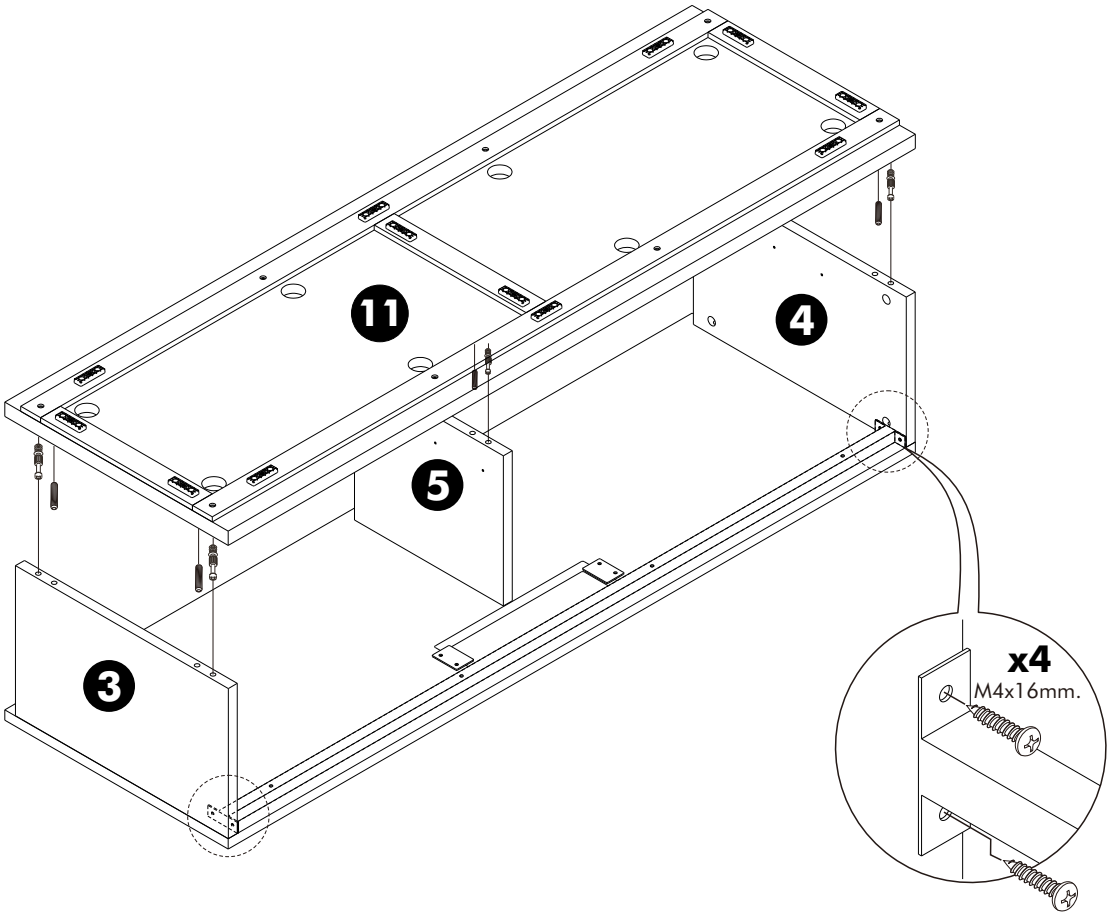

4.

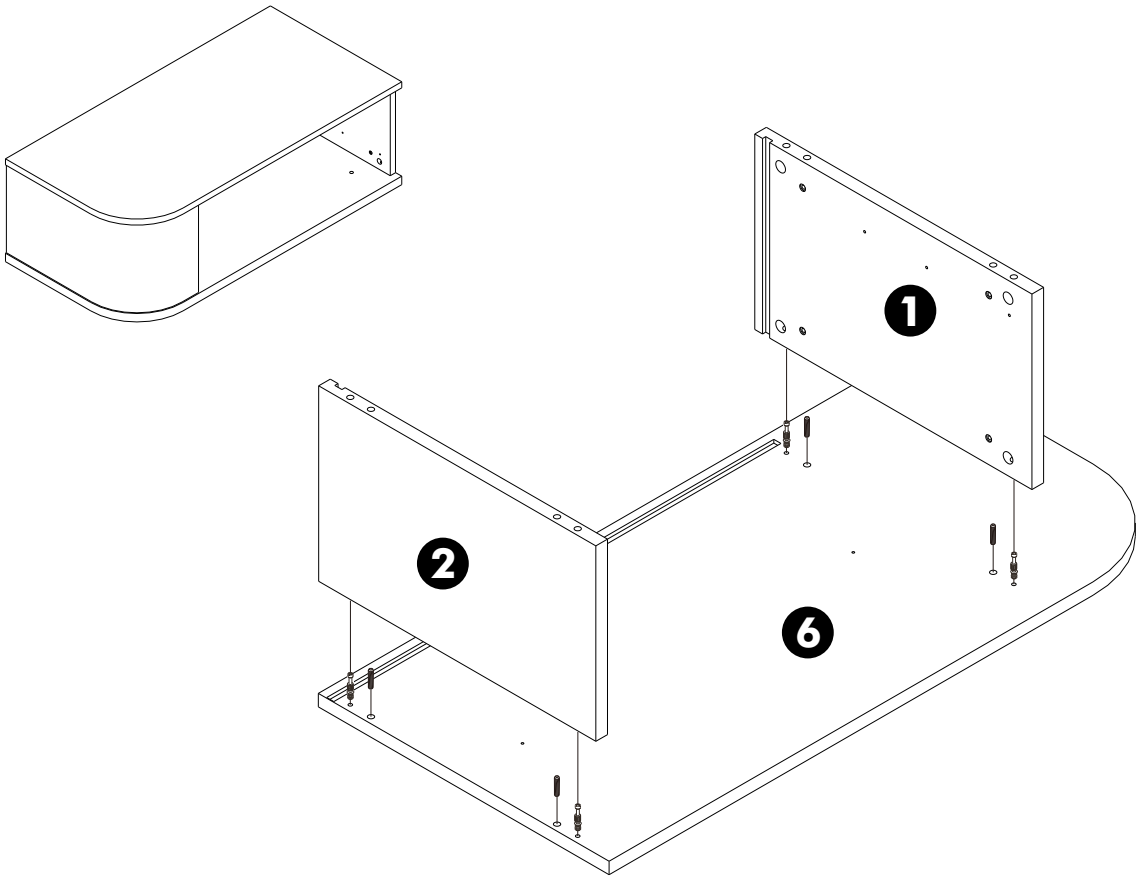

5.

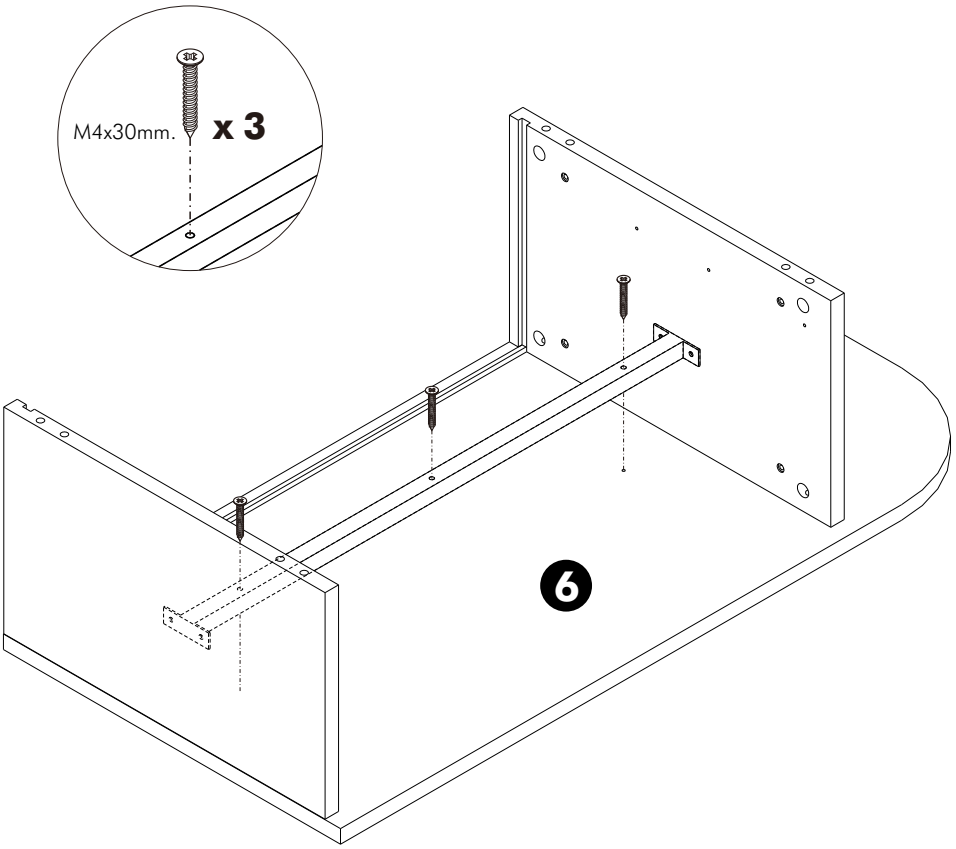

6.

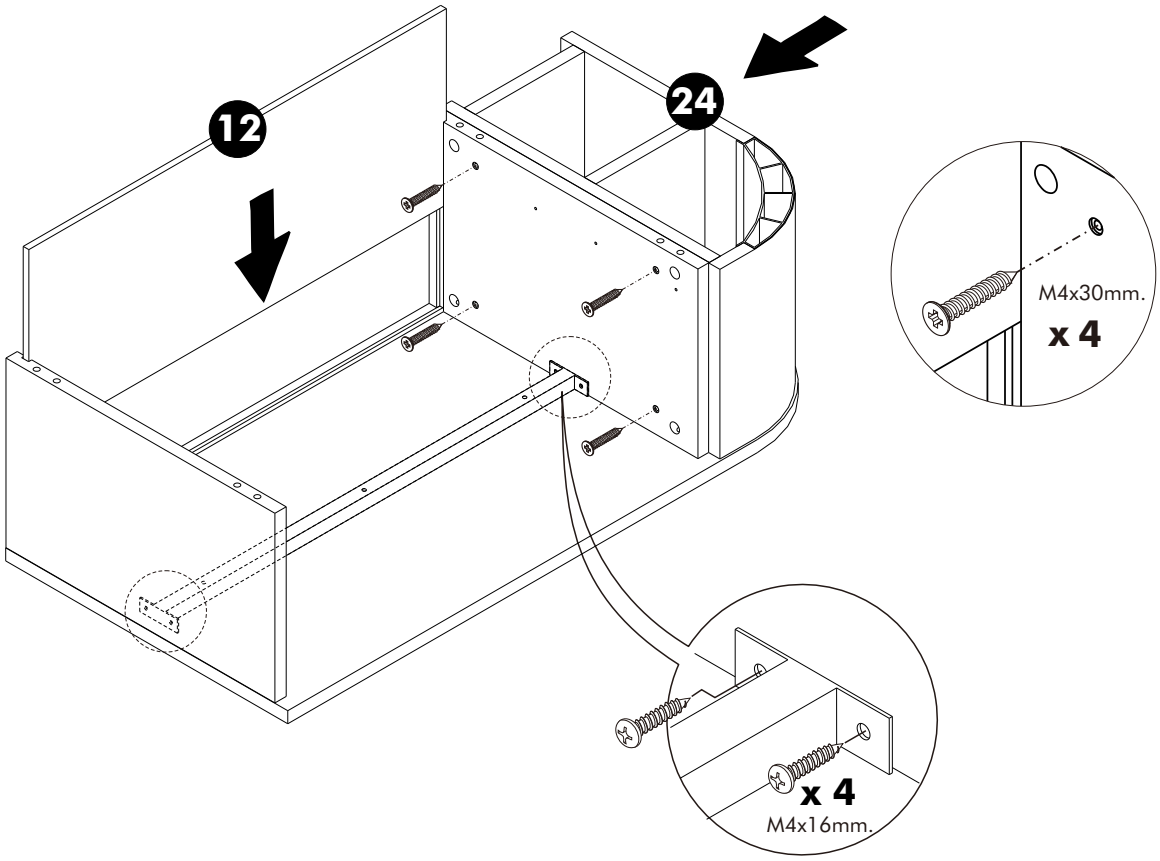

7.

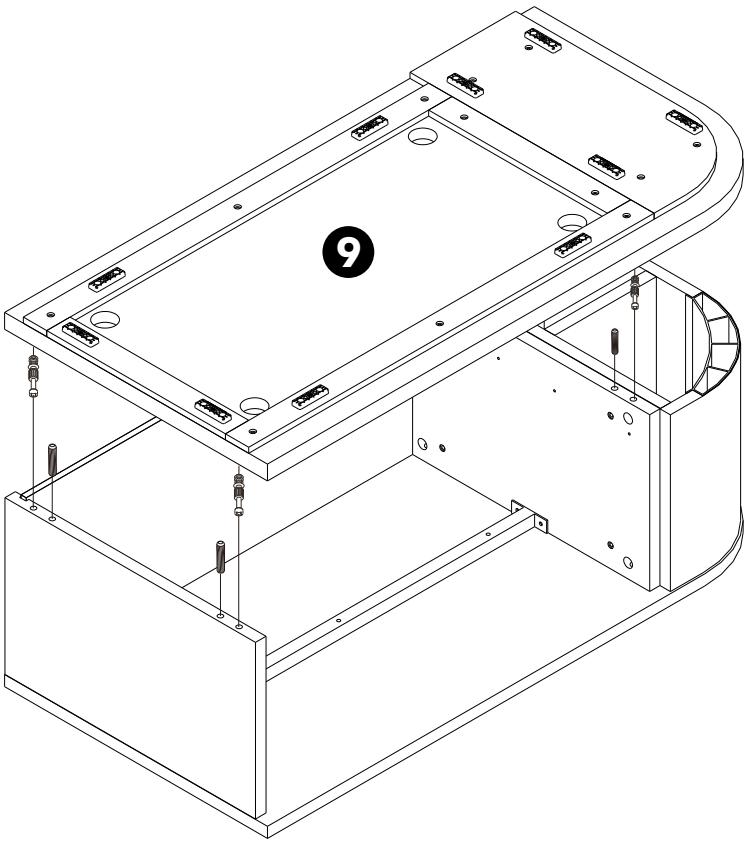

8.

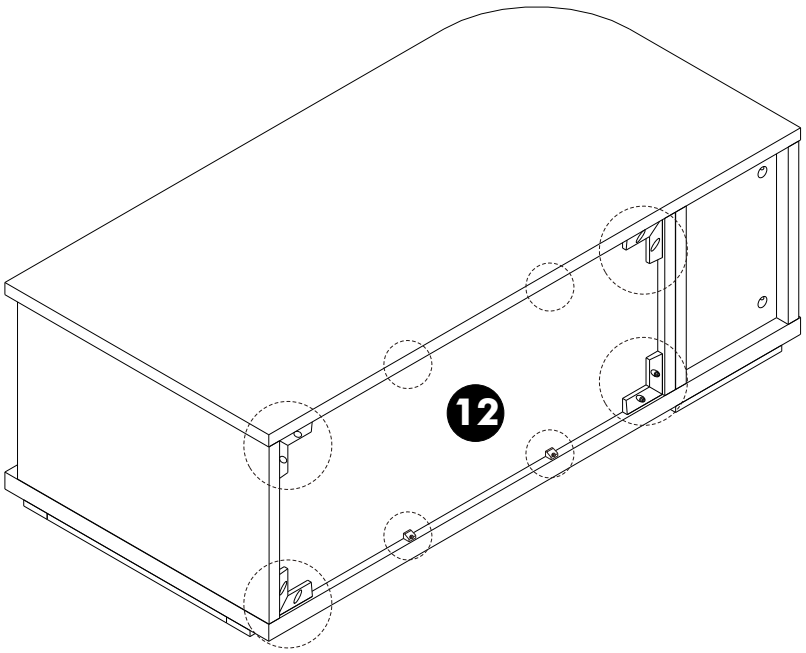

9.

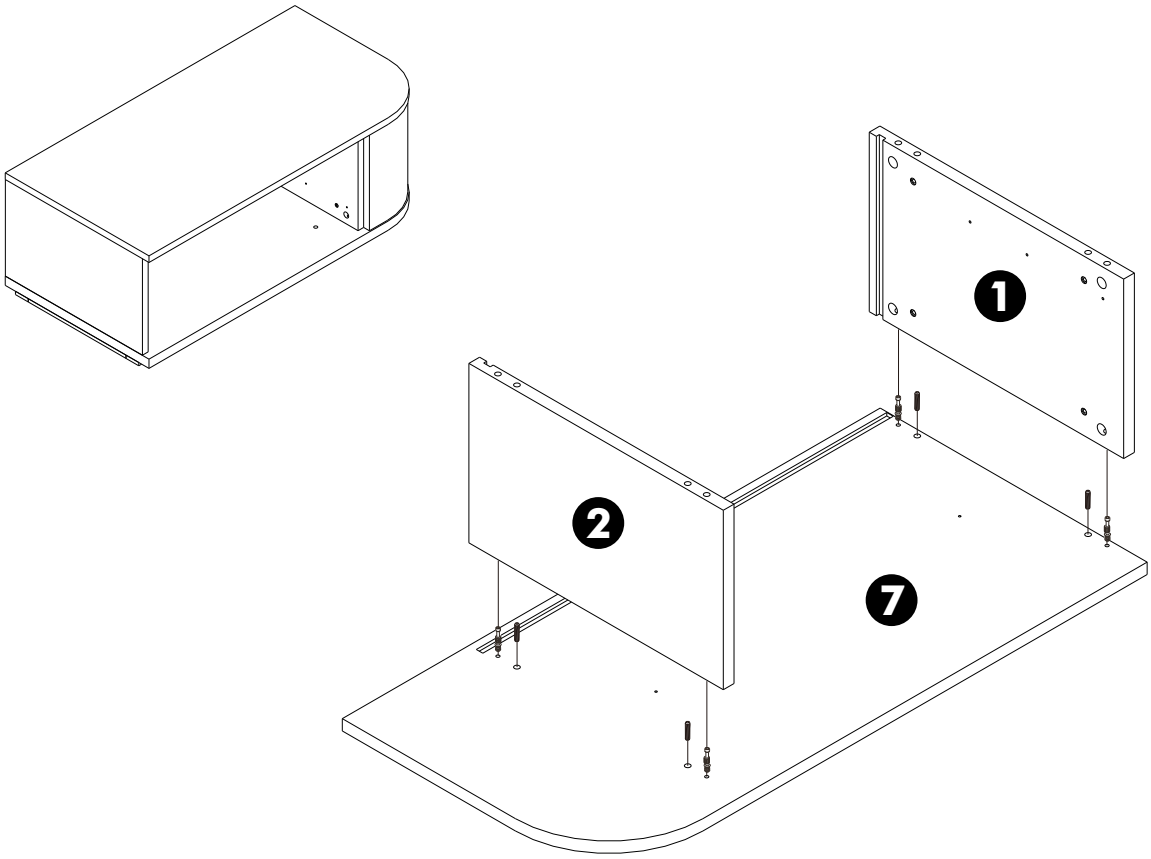

10.

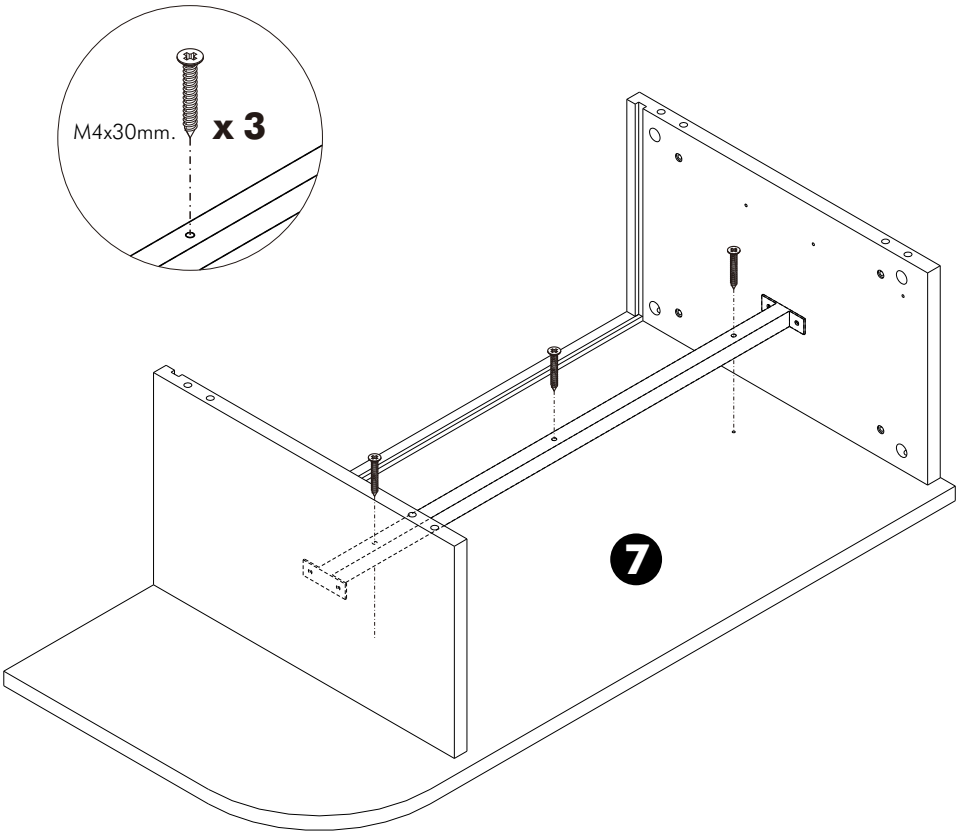

11.

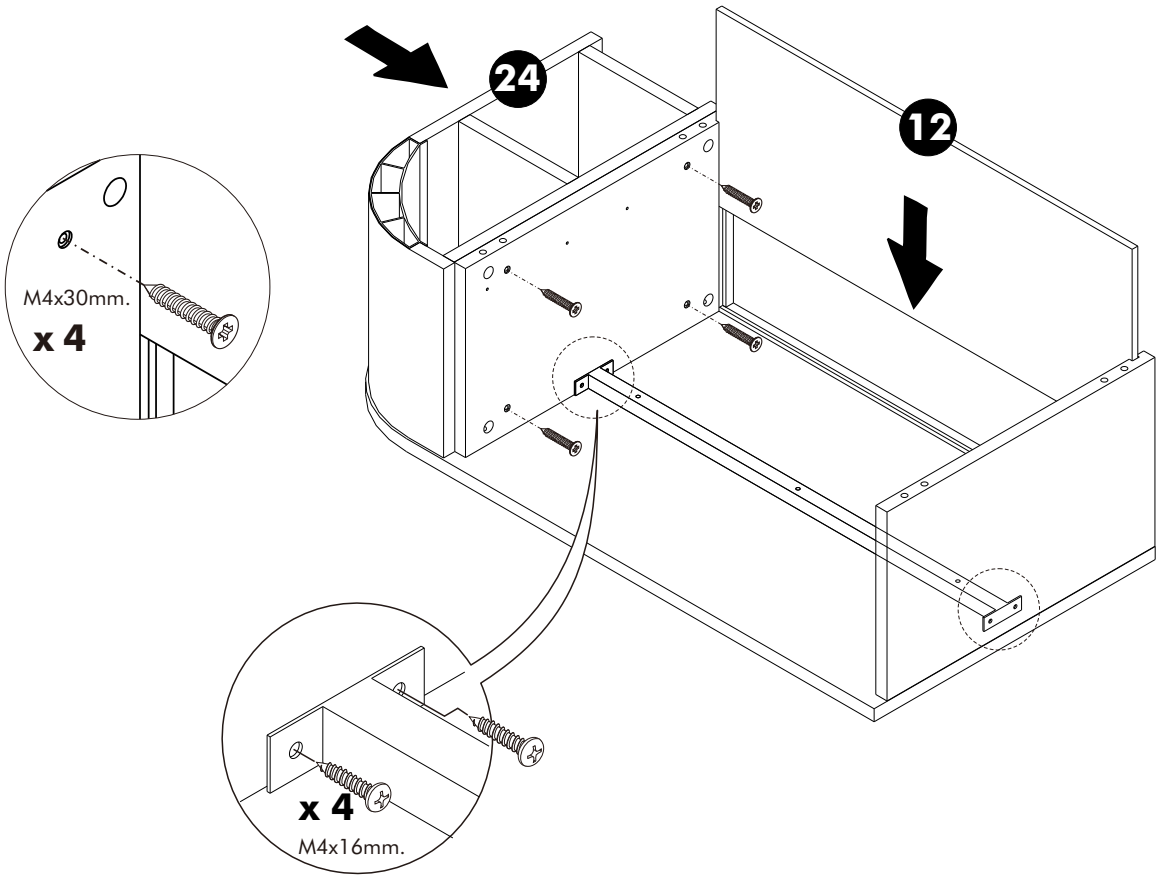

12.

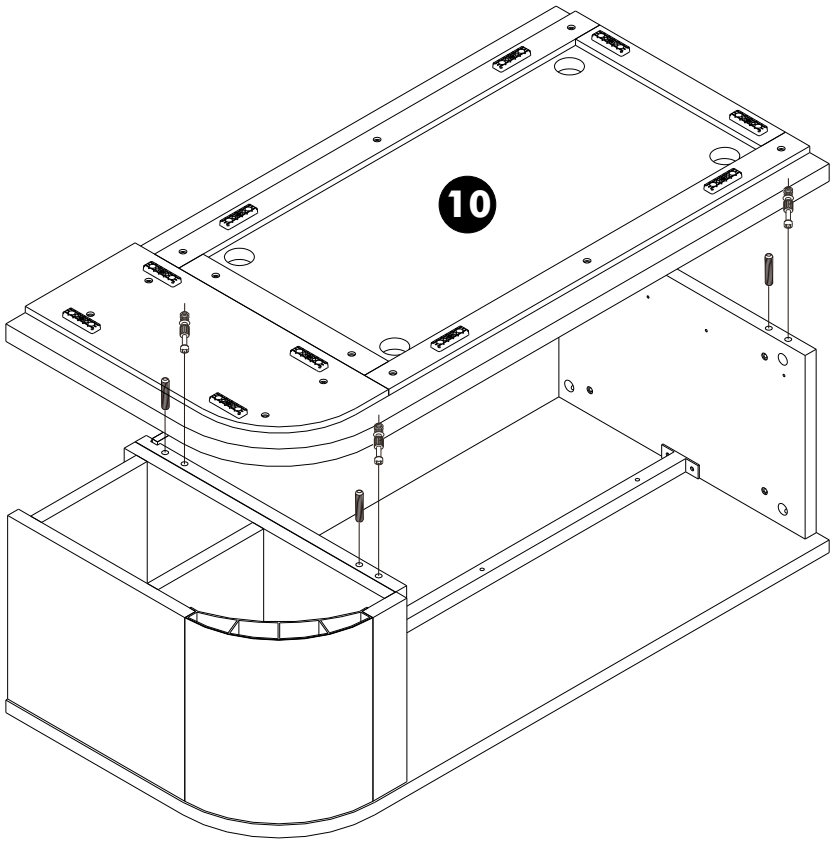

13

13.

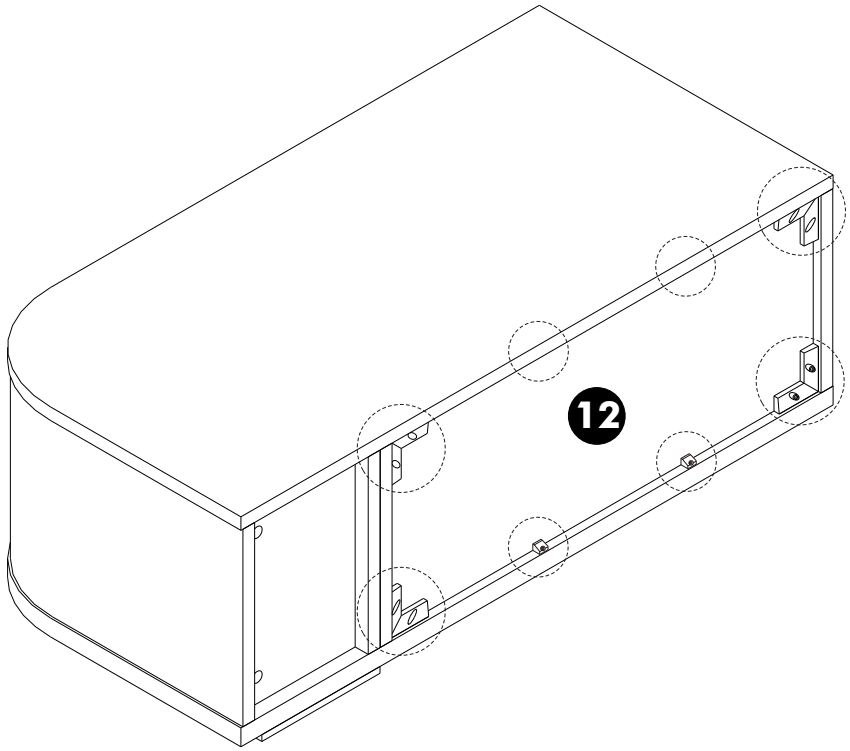

14.

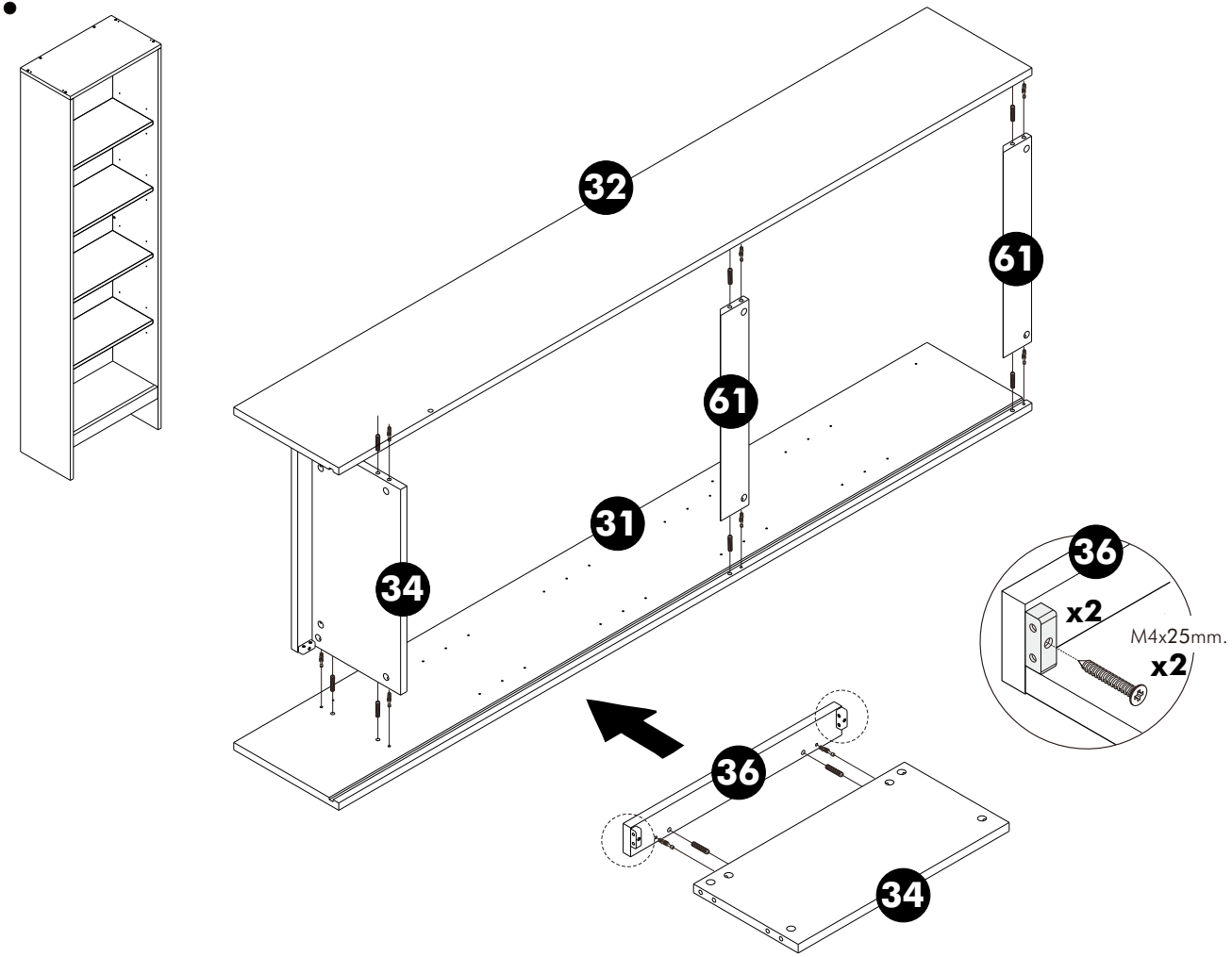

15.

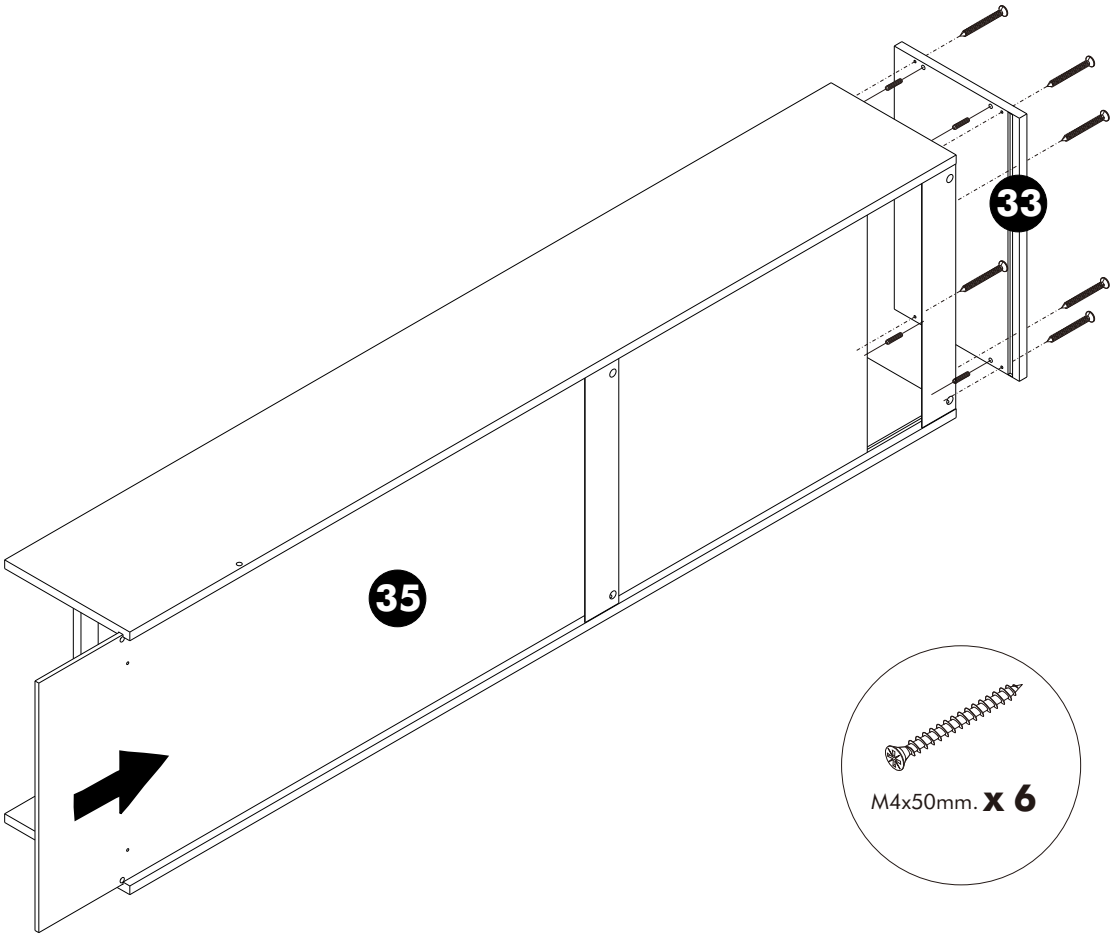

16.

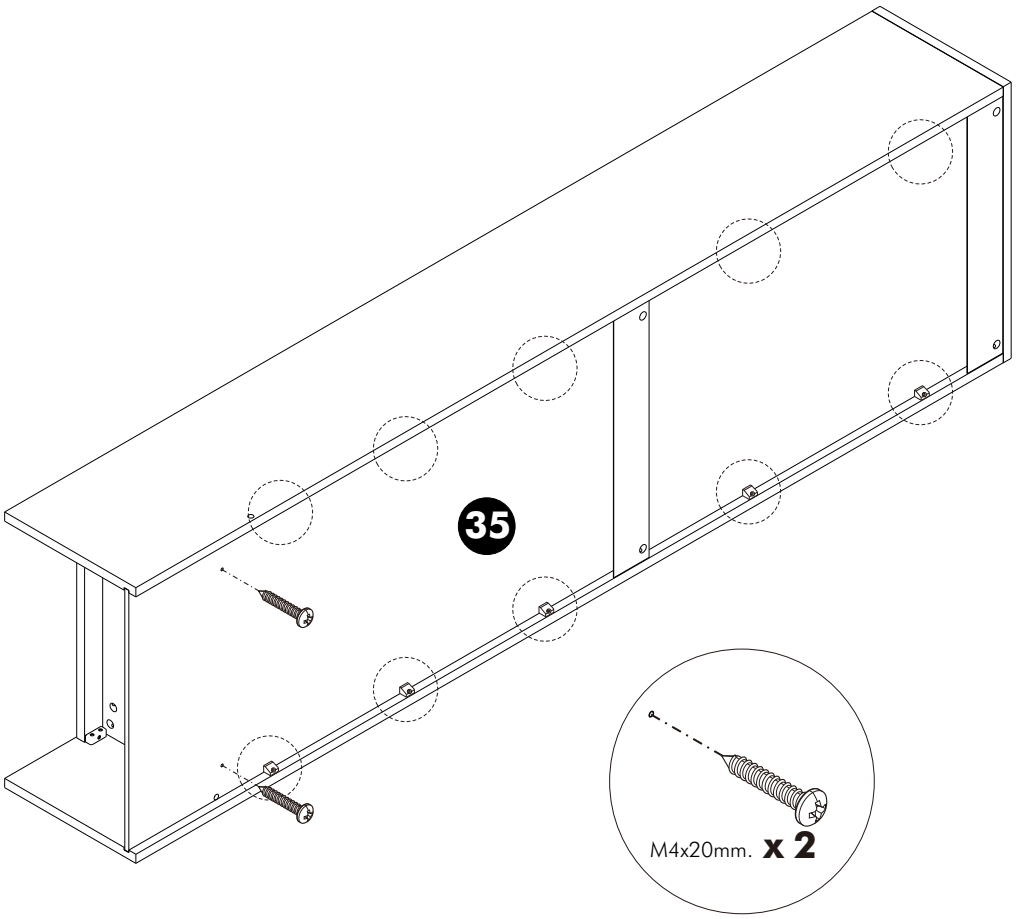

17.

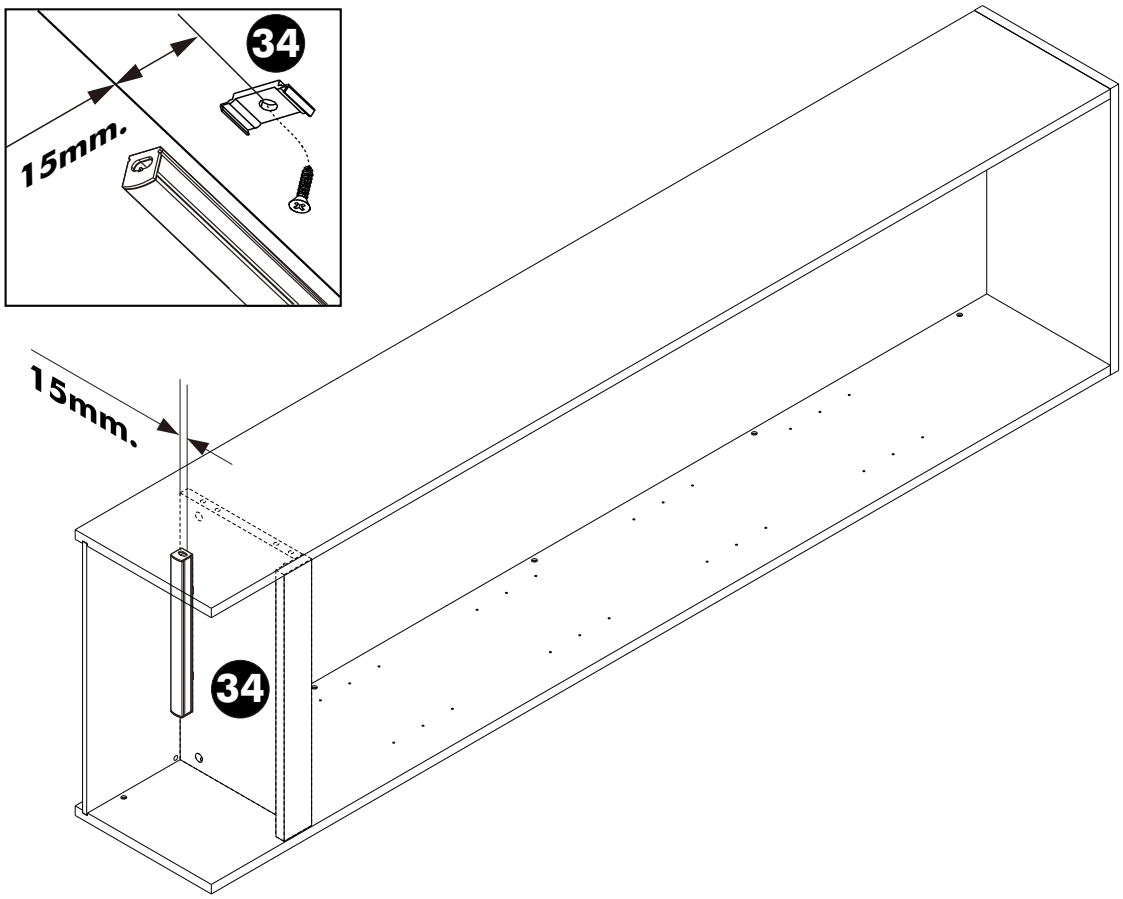

18.

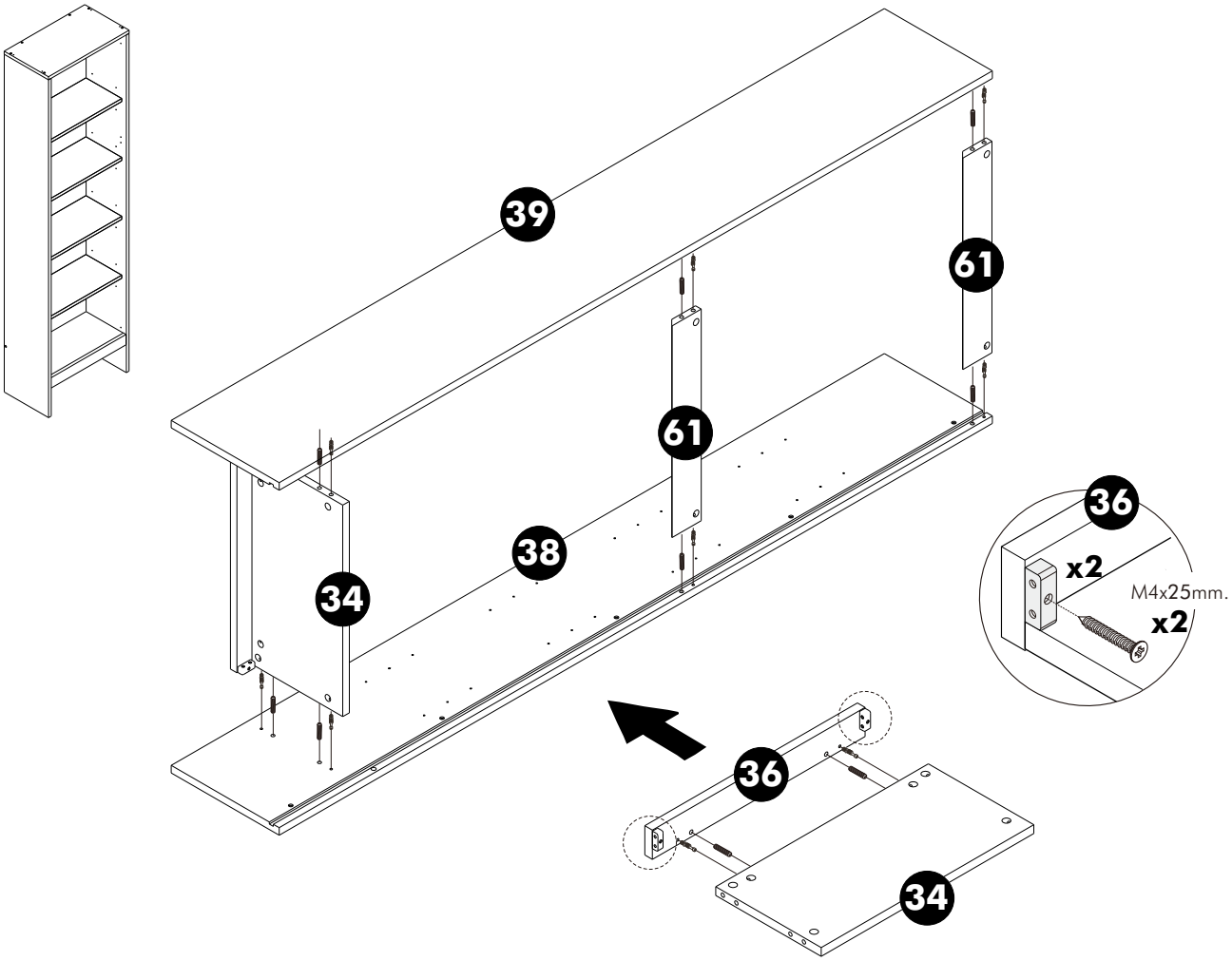

19.

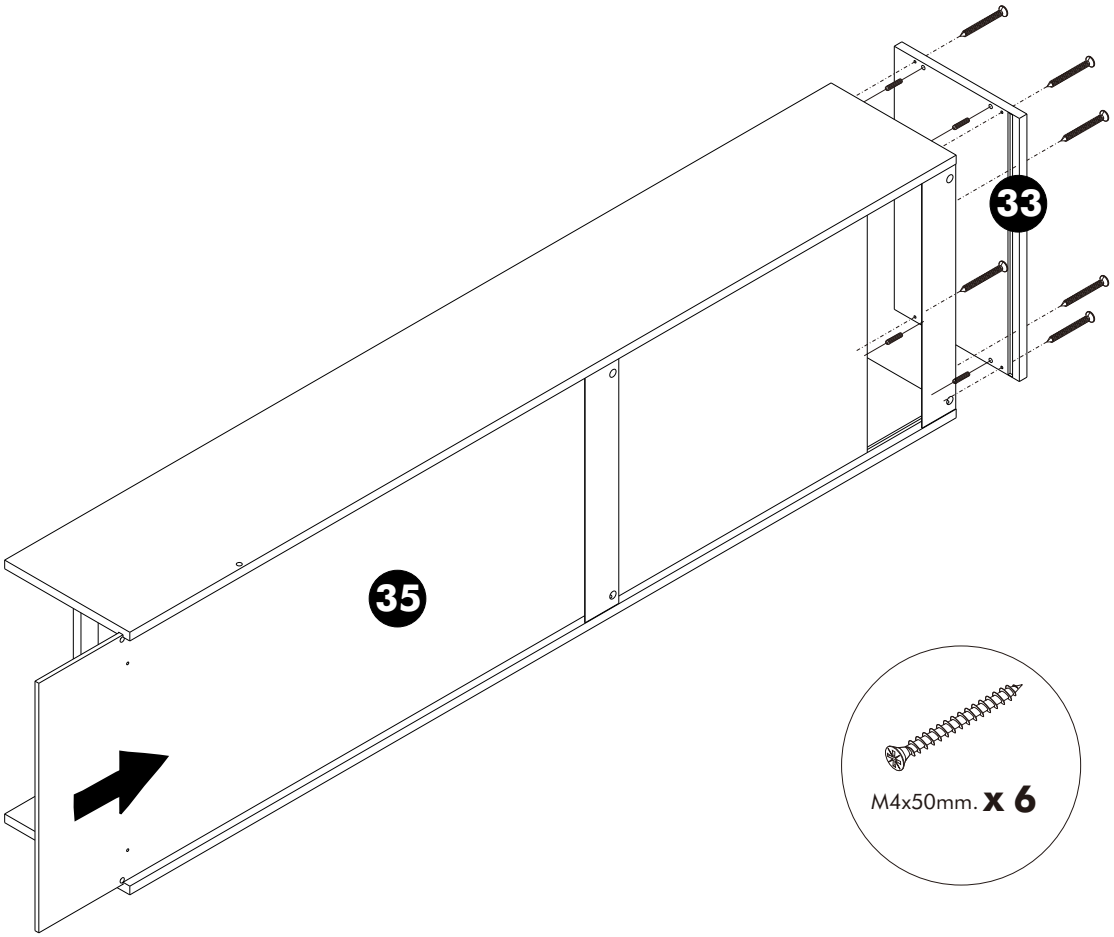

20.

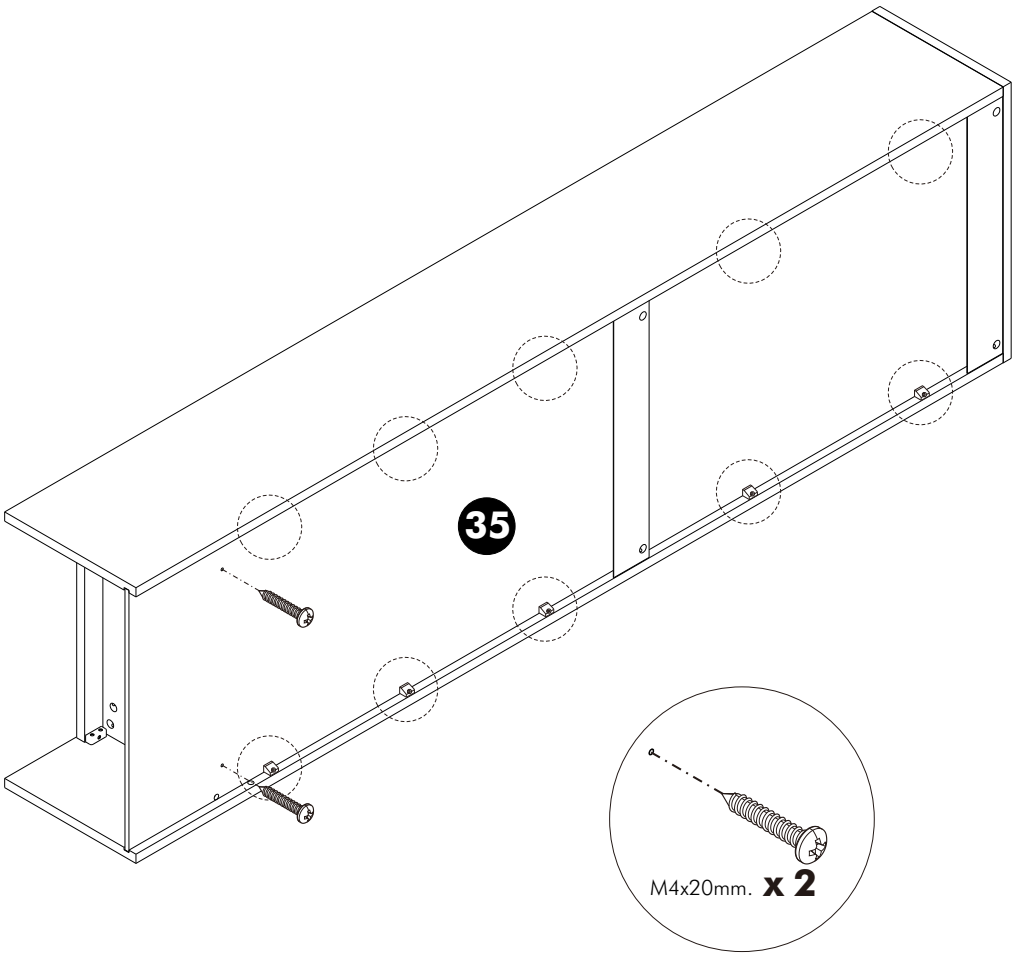

21.

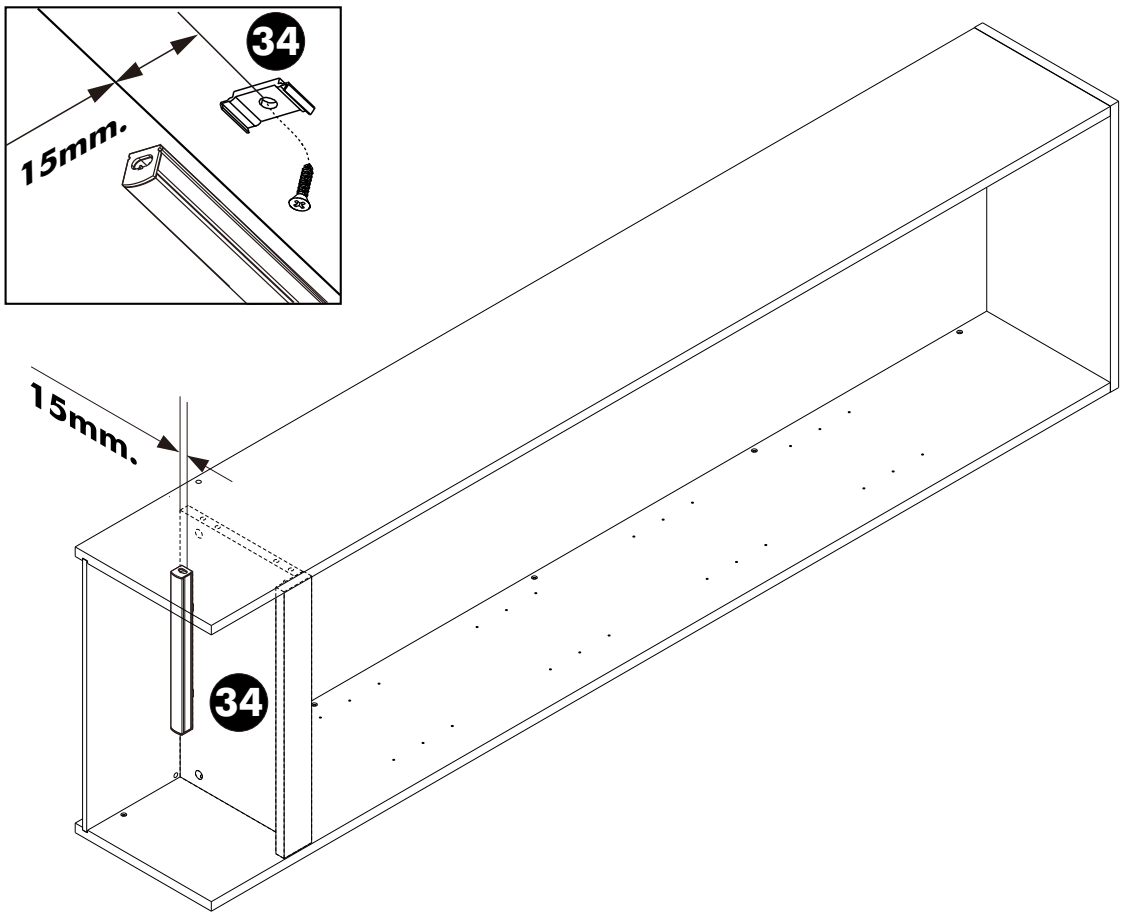

22.

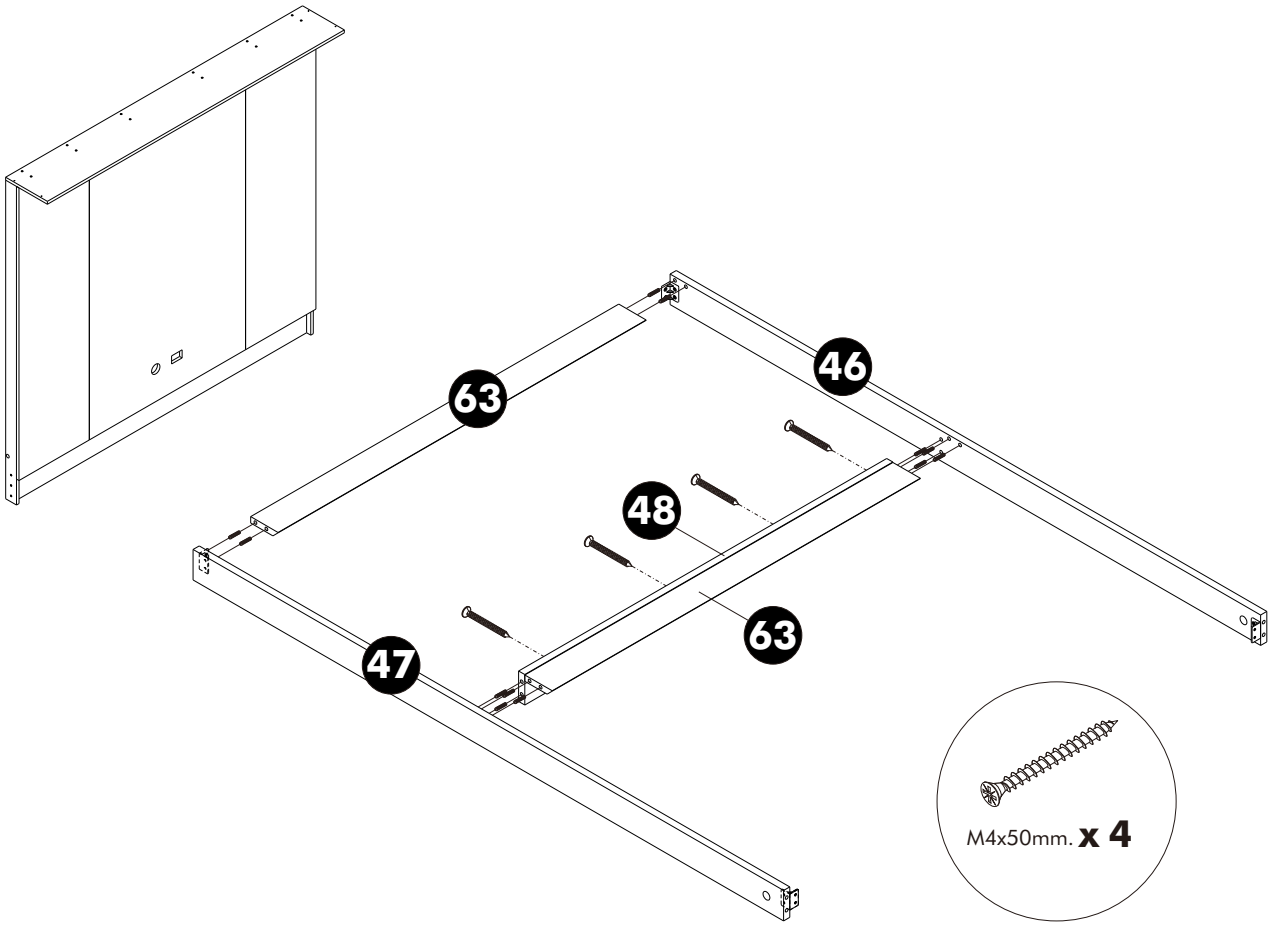

23.

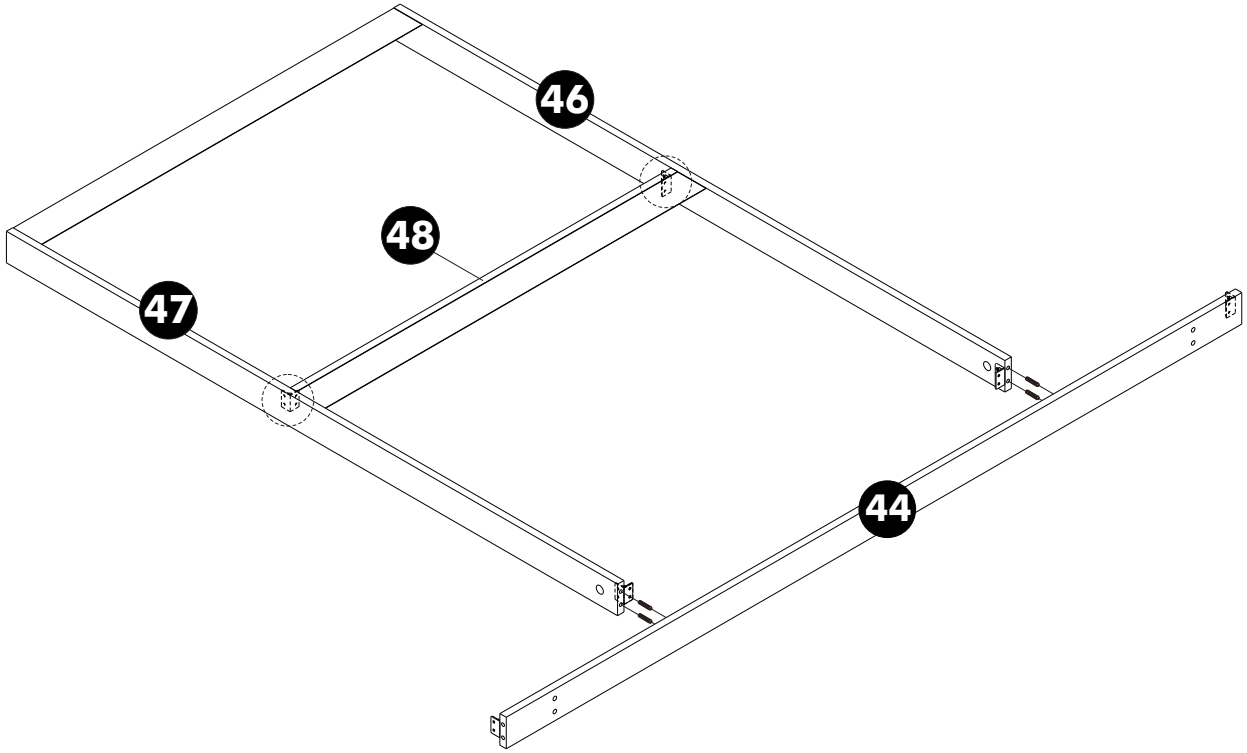

24.

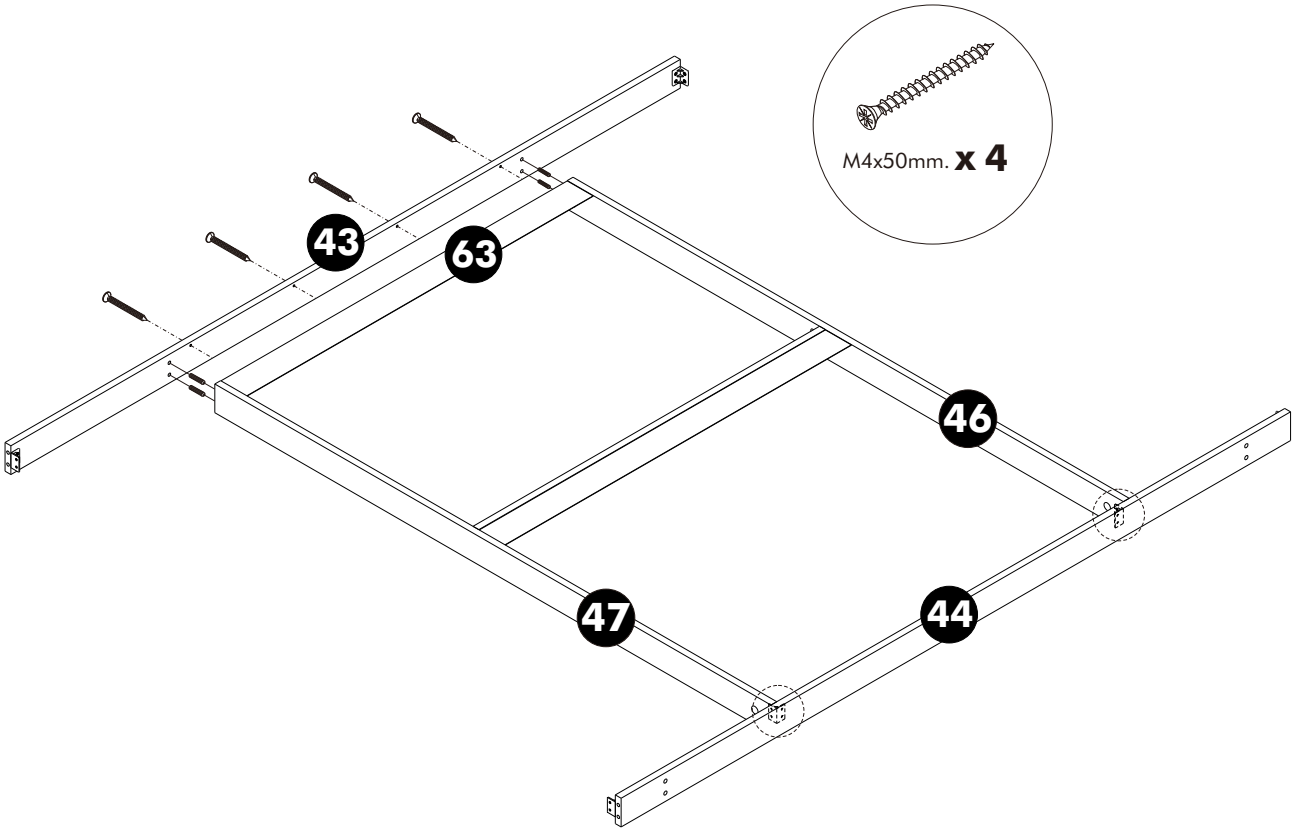

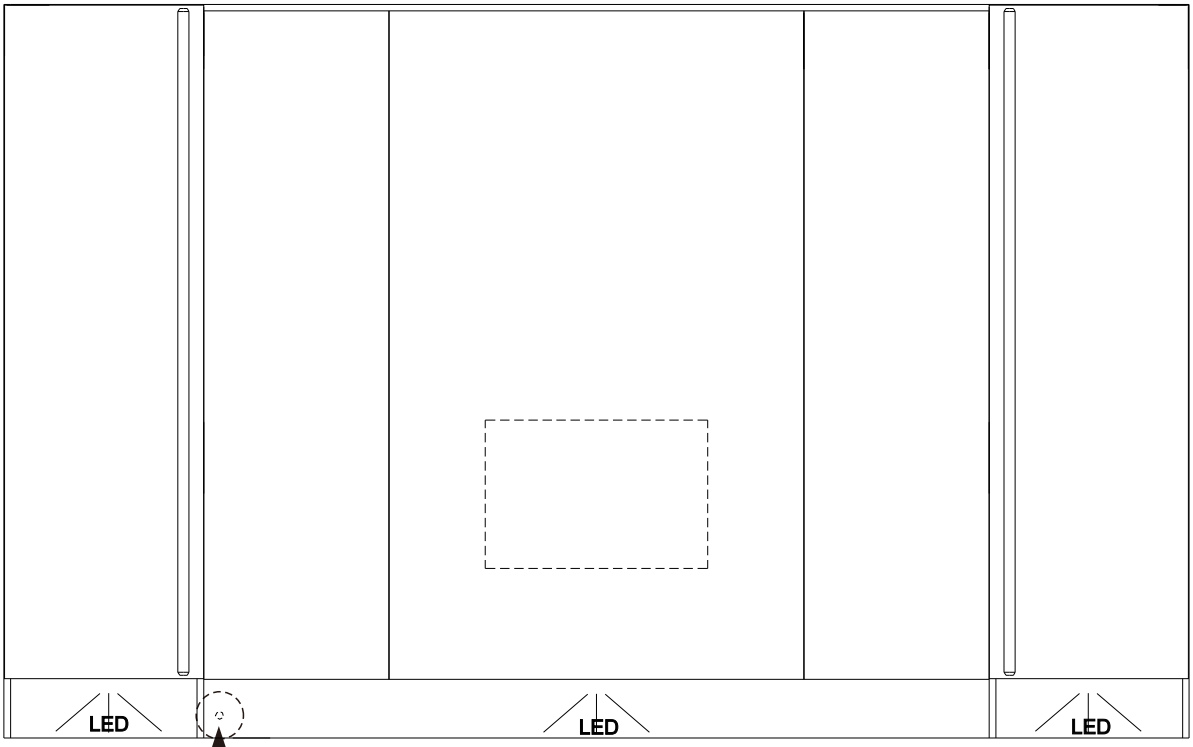

LEFT สวิตช์ไฟ (Light Switch)

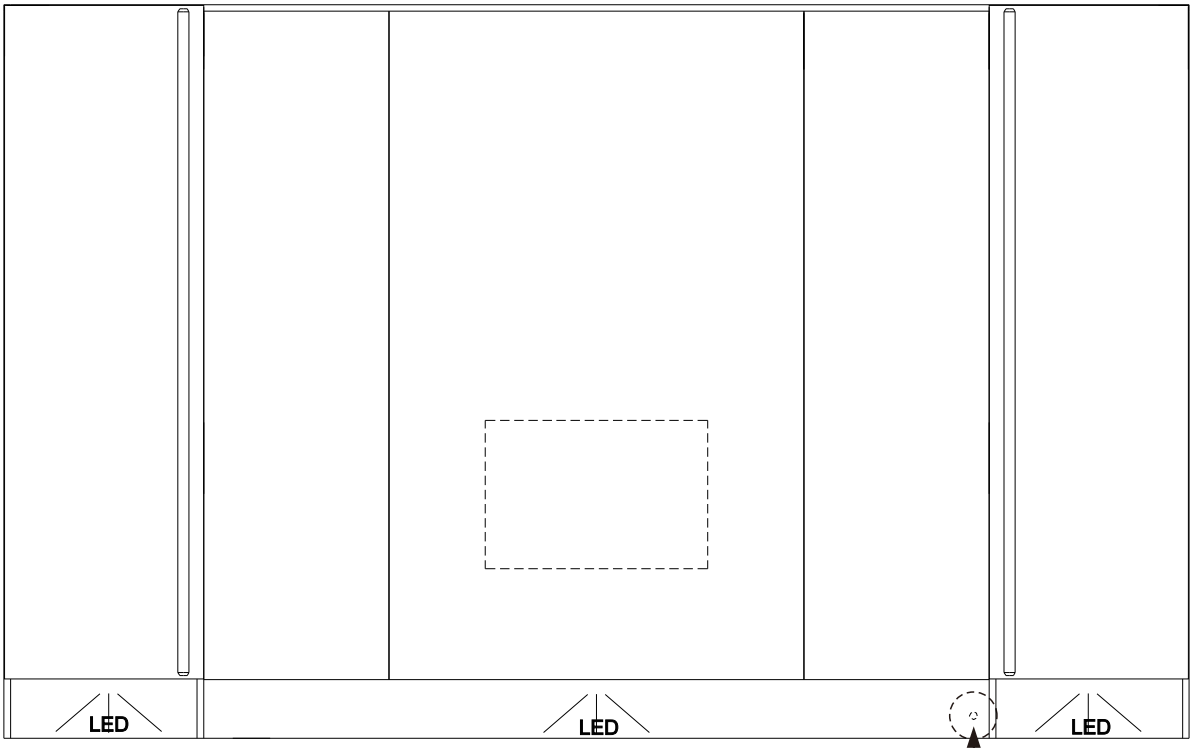

สวิตช์ไฟ (Light Switch) RIGHT

25.

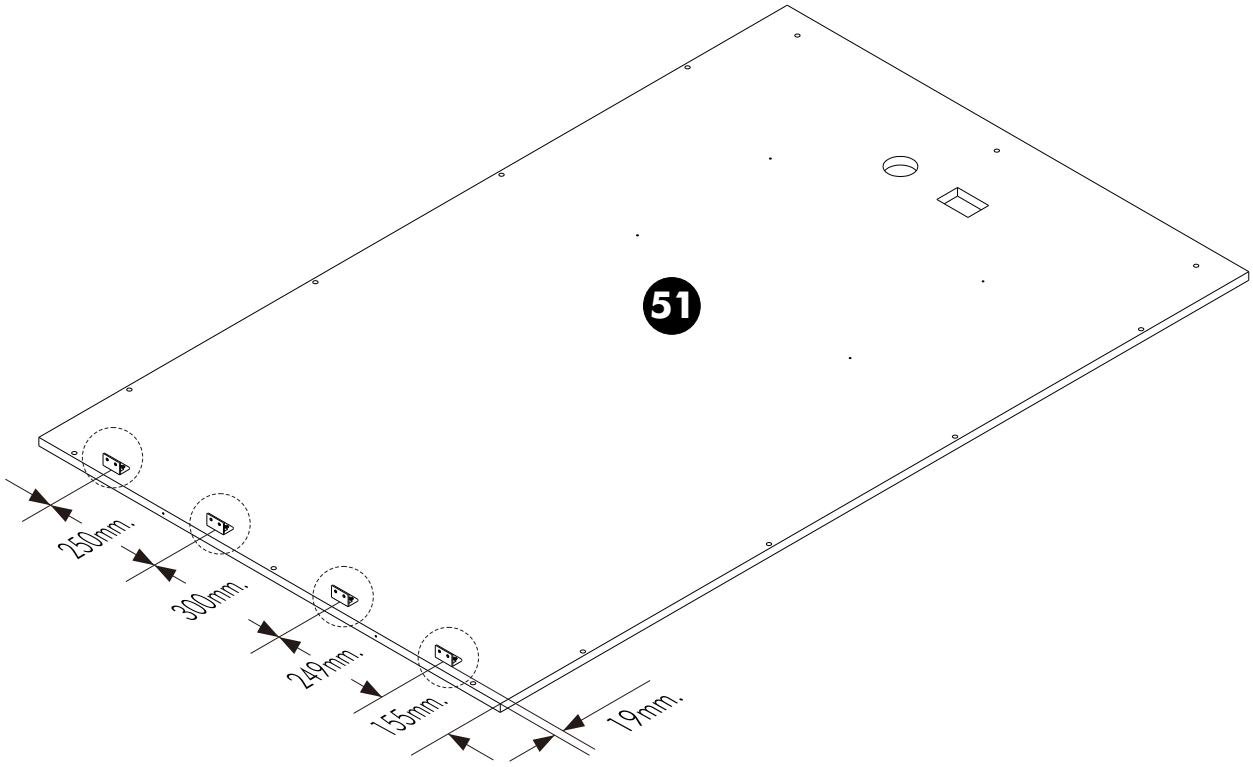
51
250mm.
300mm.
249mm.
155mm.
19mm.

26.

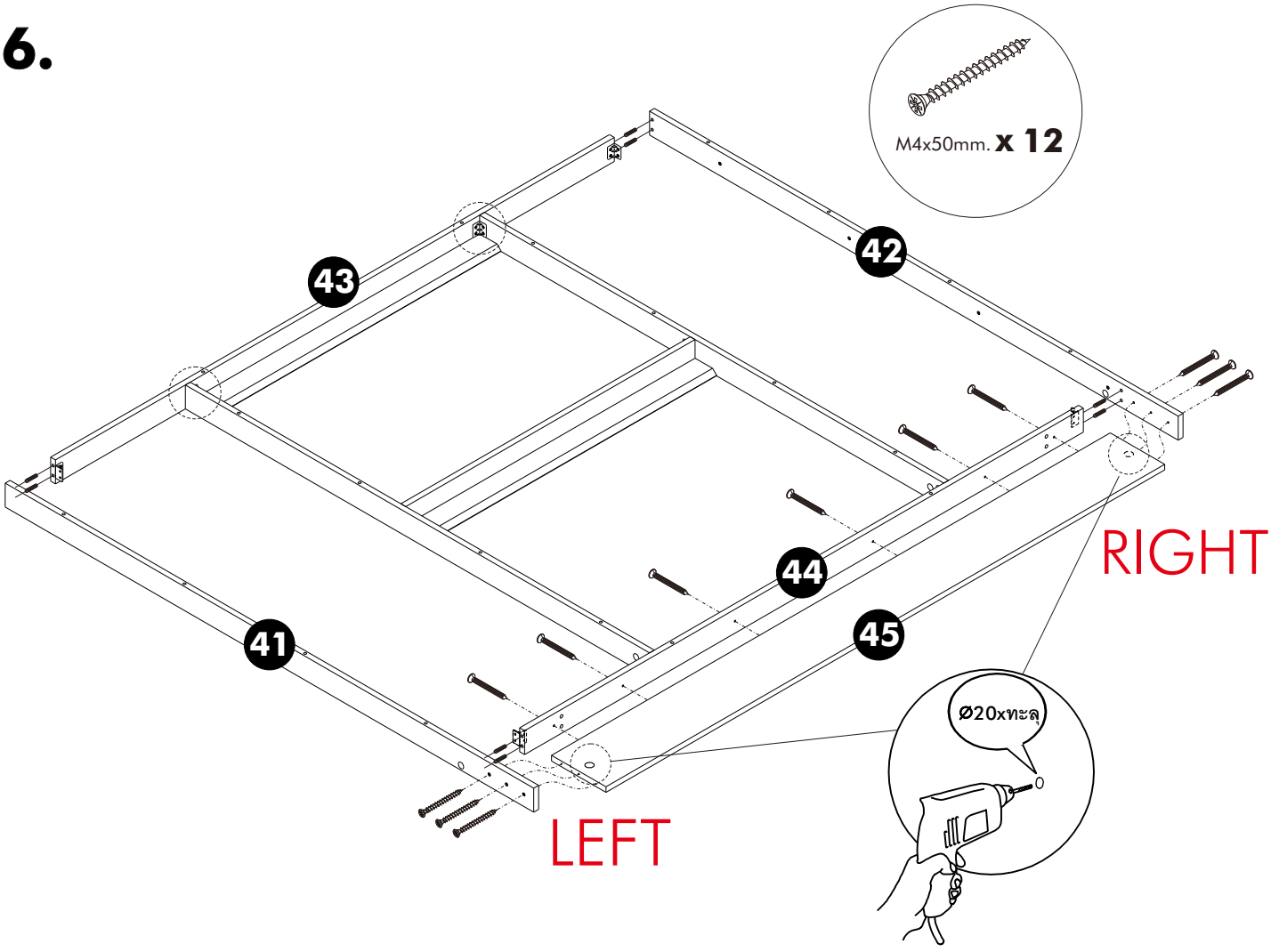
M4x50mm. x 12
42
43
44
45
41
RIGHT
LEFT
Ø20xทะลุ

27.

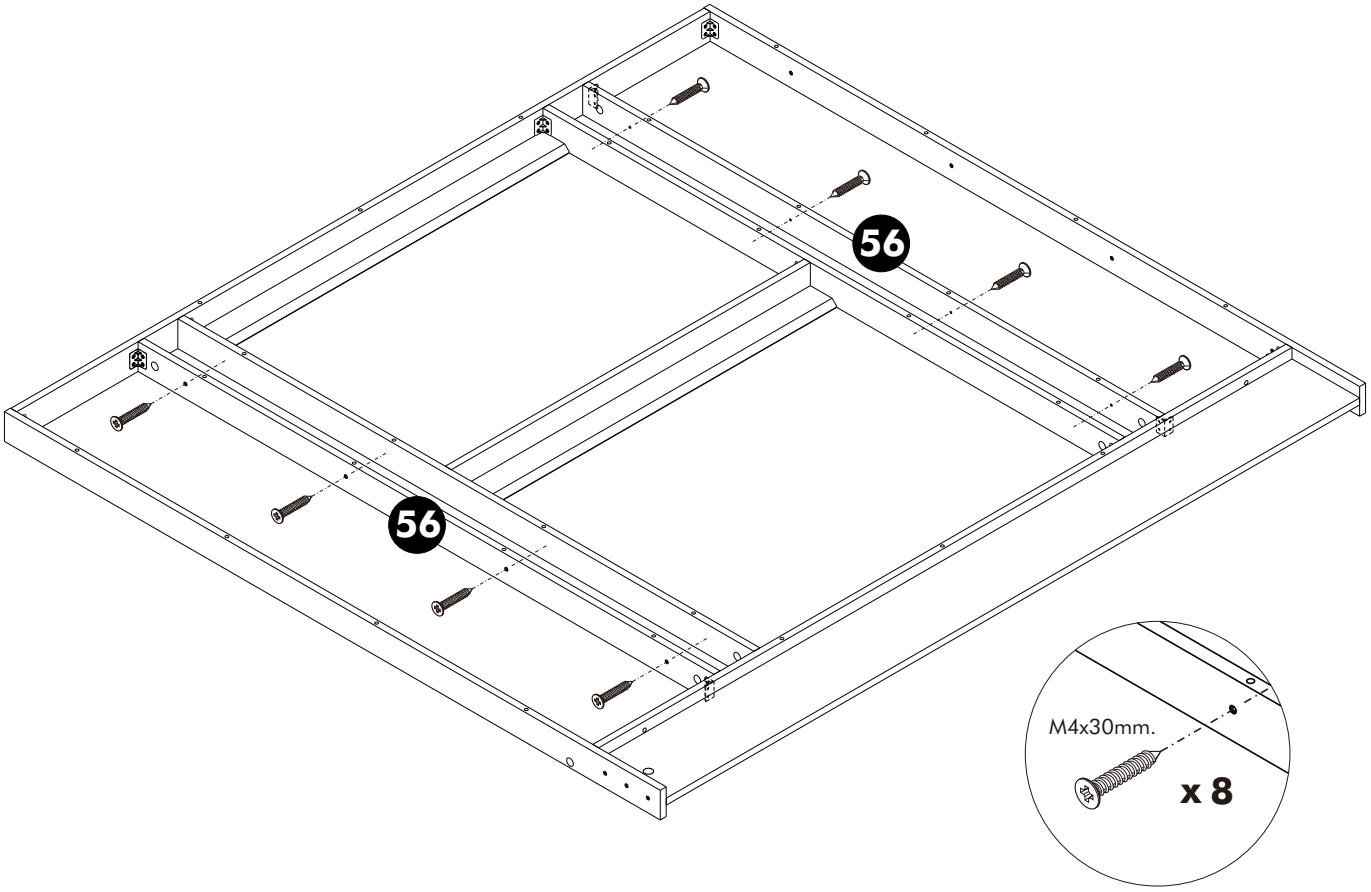
56
56
M4x30mm.
x 8

28.

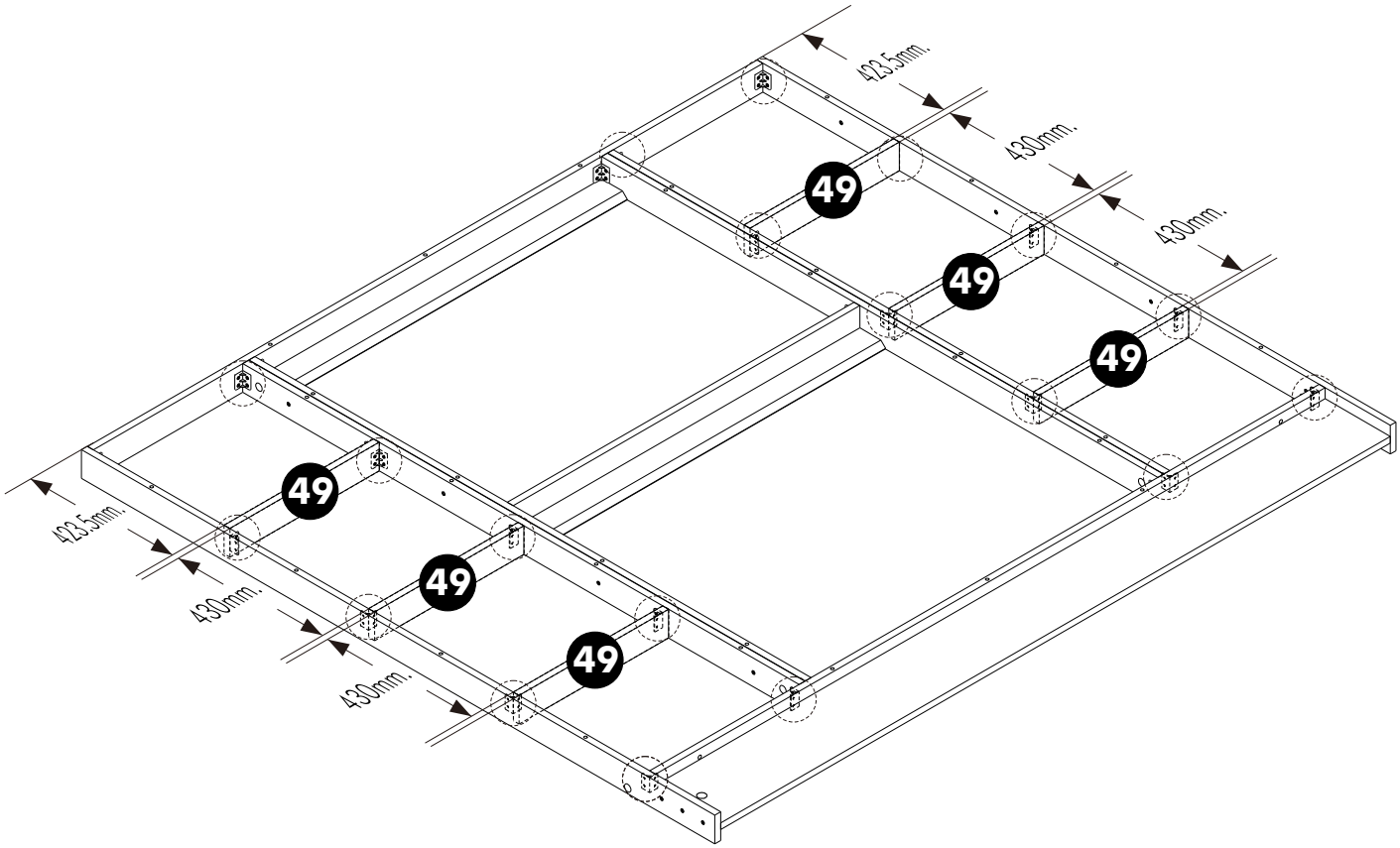
423.5mm.
430mm.
430mm.
49
49
49
49
423.5mm.
430mm.
430mm.
49
49

29. RIGHT

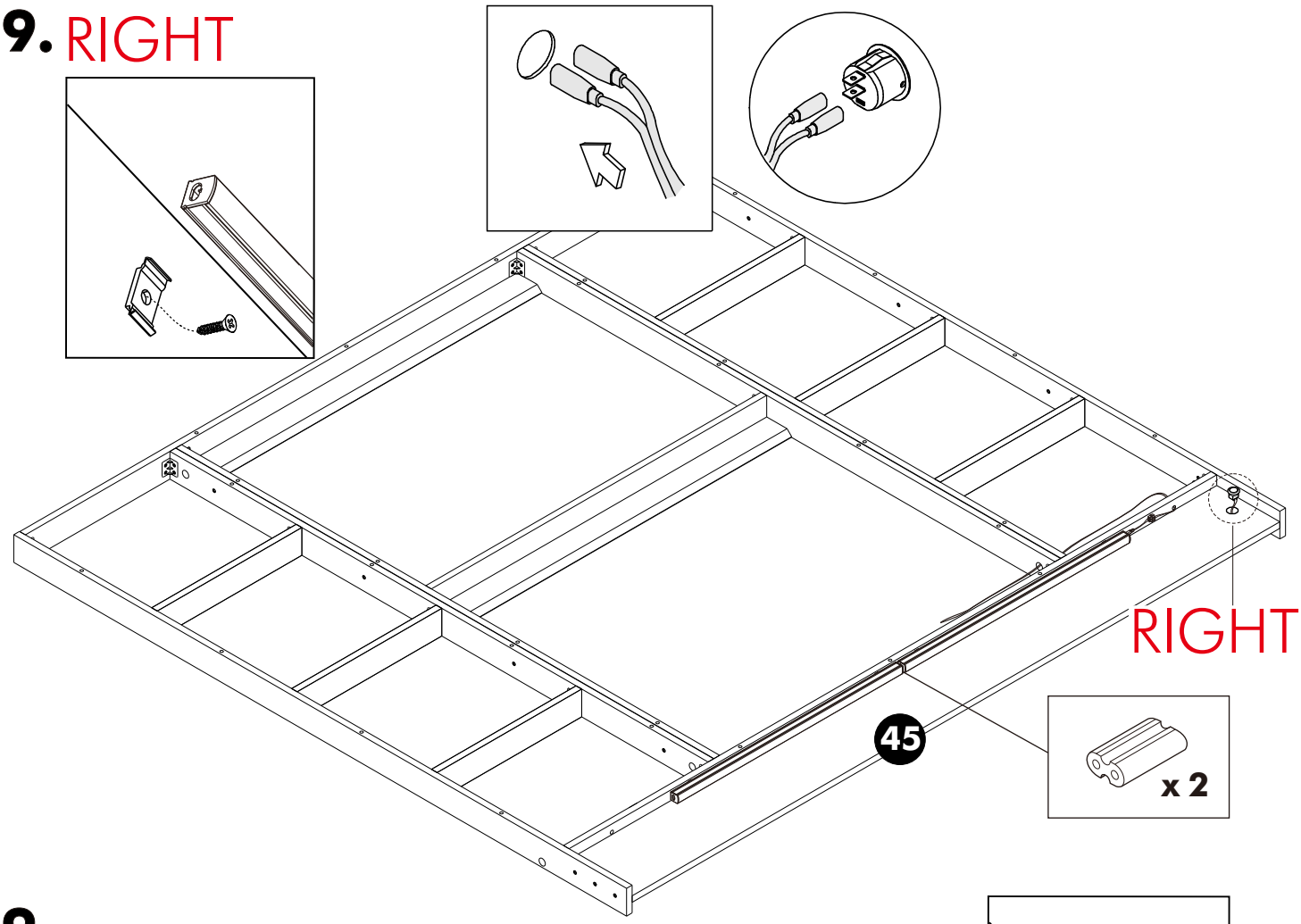

29. LEFT

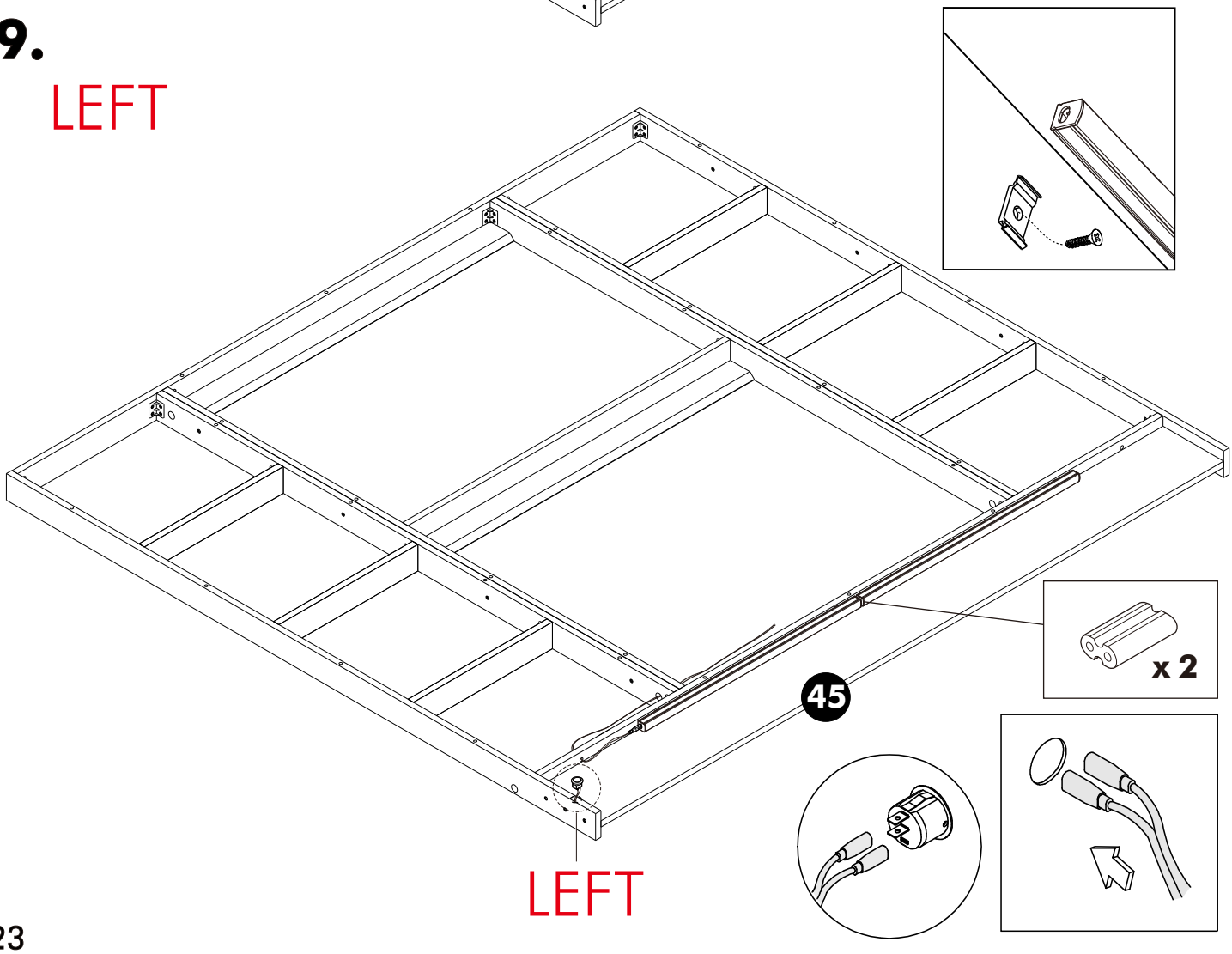

30.

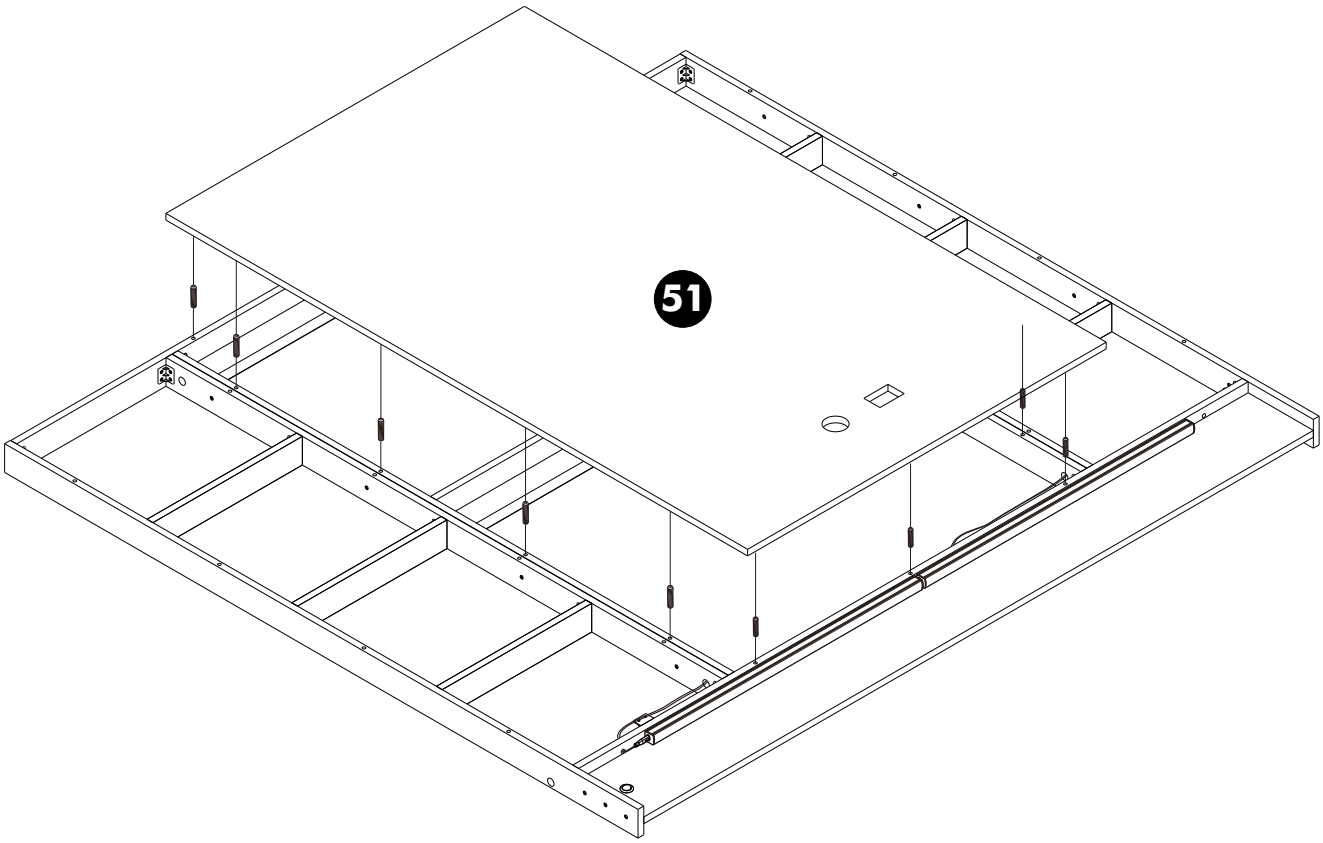

31.

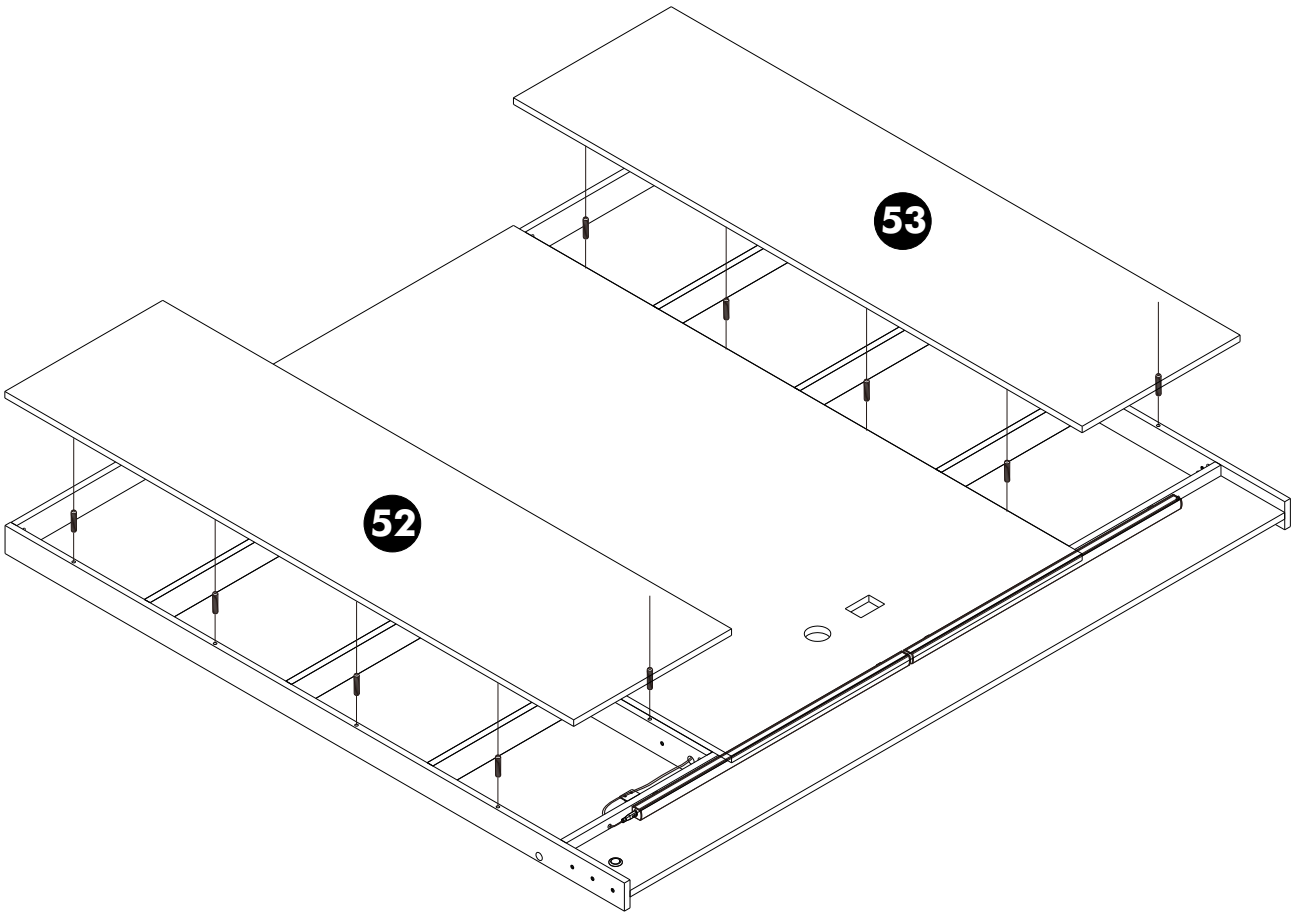

32.

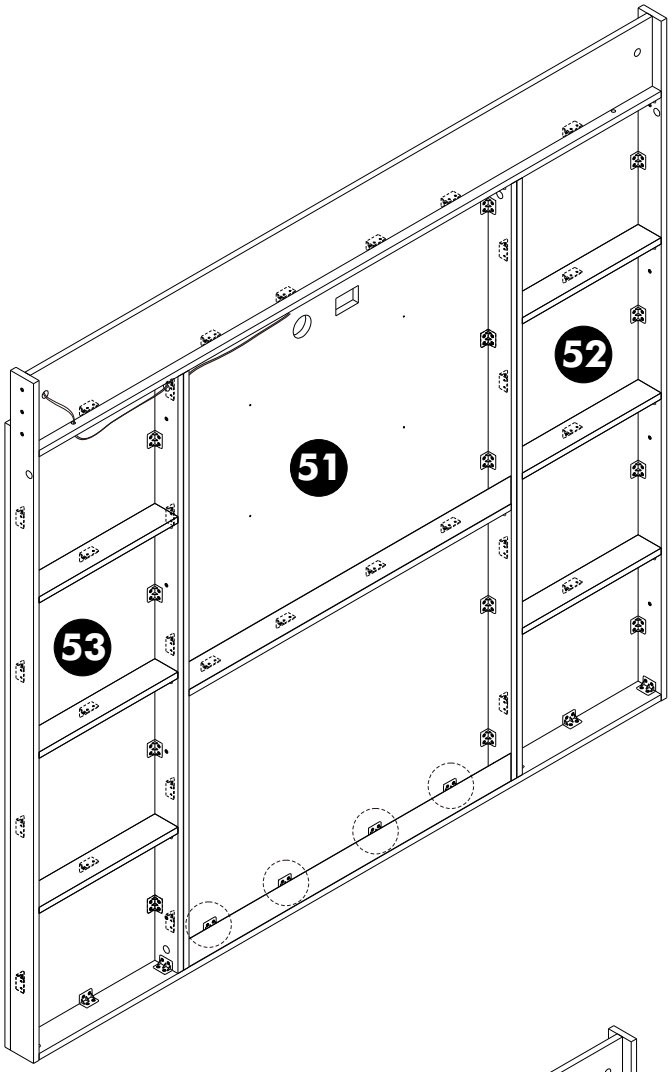

33.

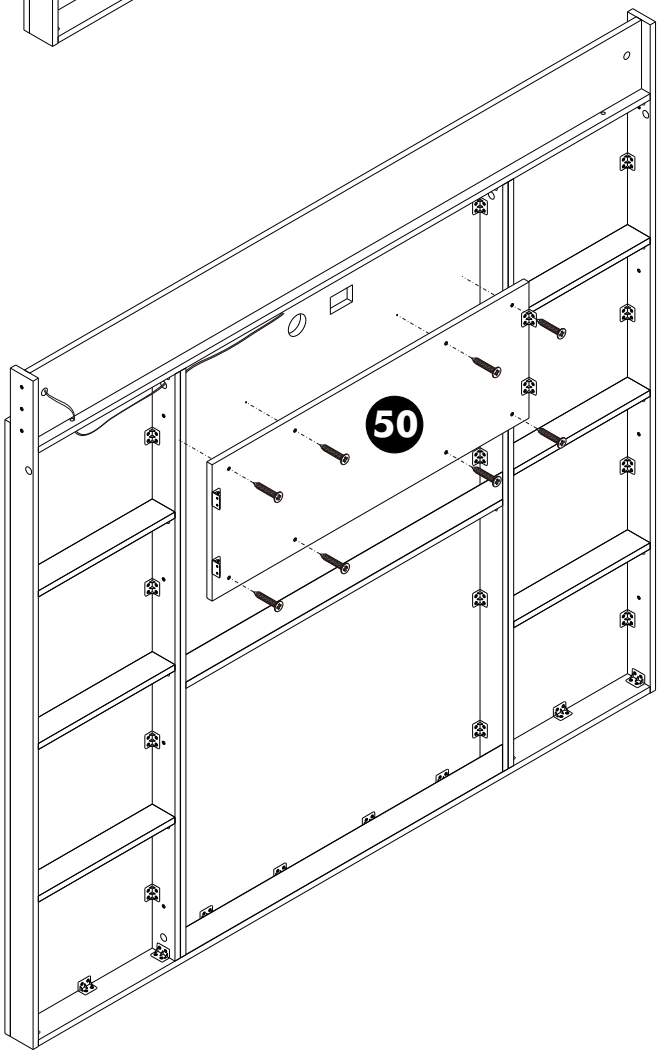

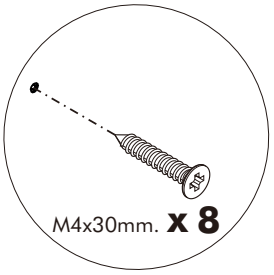

34.

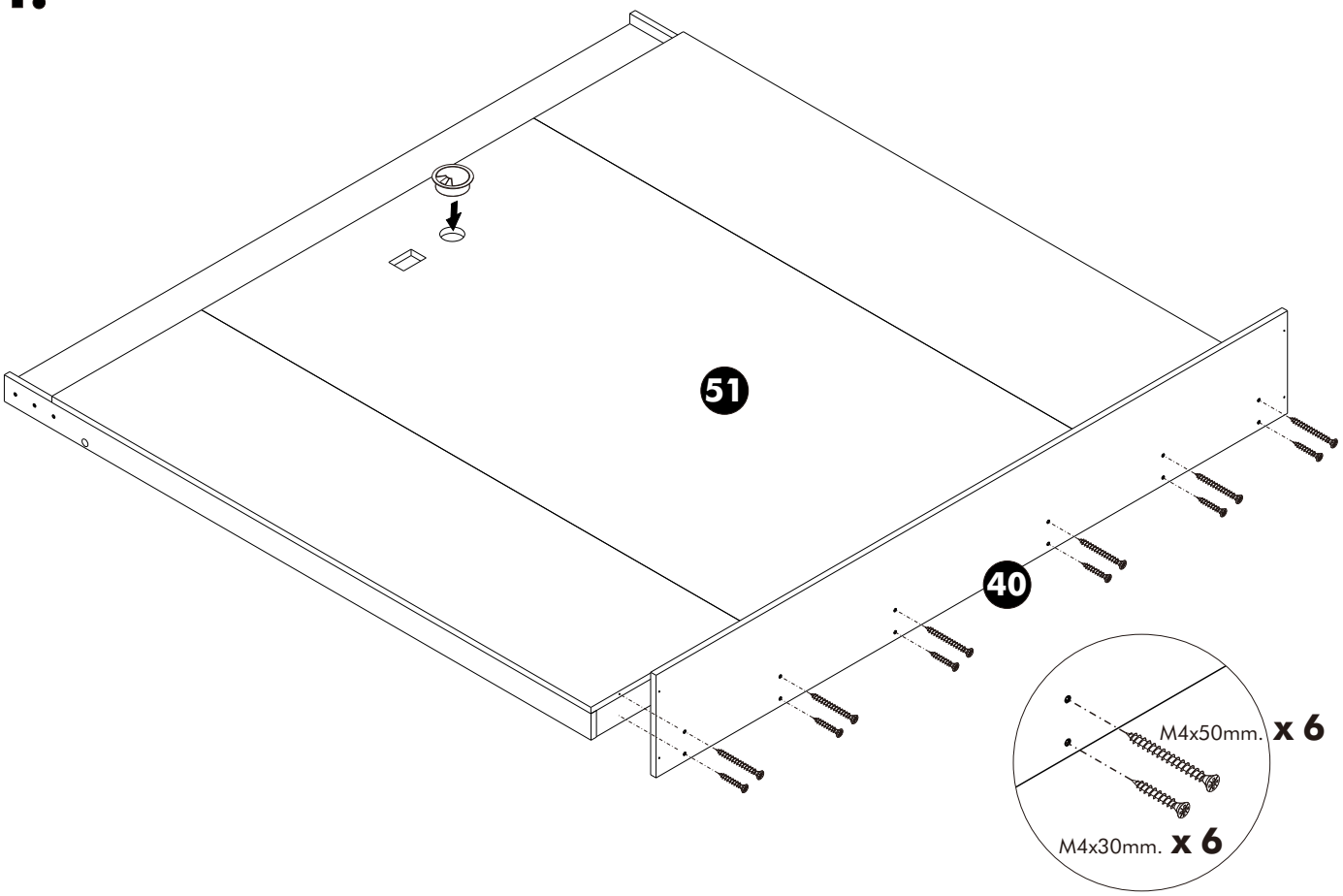
51
40
M4x50mm. x 6
M4x30mm. x 6

35.

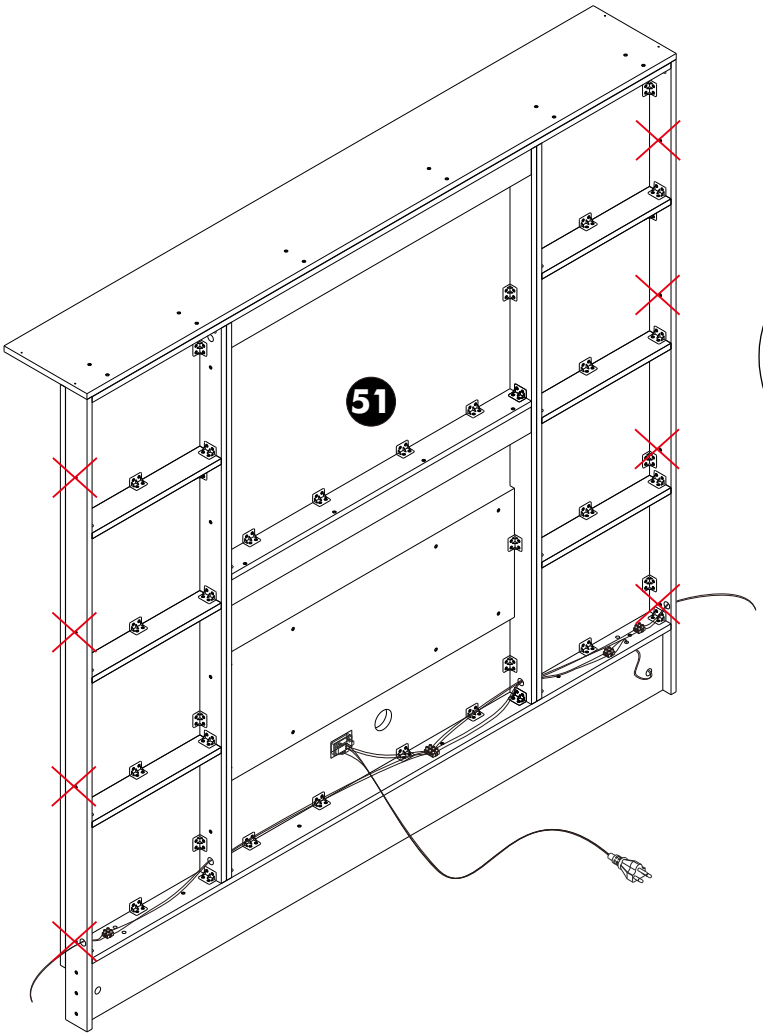
51

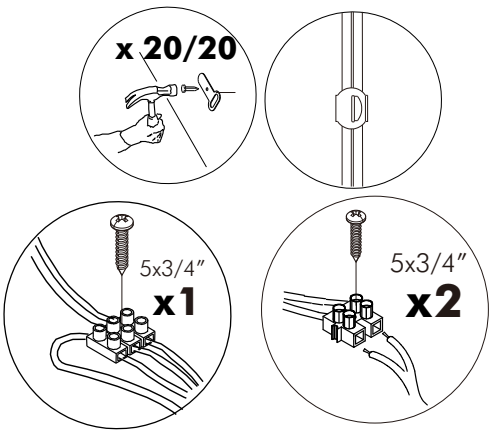
x 20/20
5x3/4"
x1
5x3/4"
x2

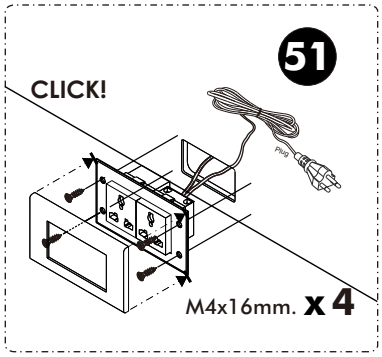
51
CLICK!
M4x16mm. x 4

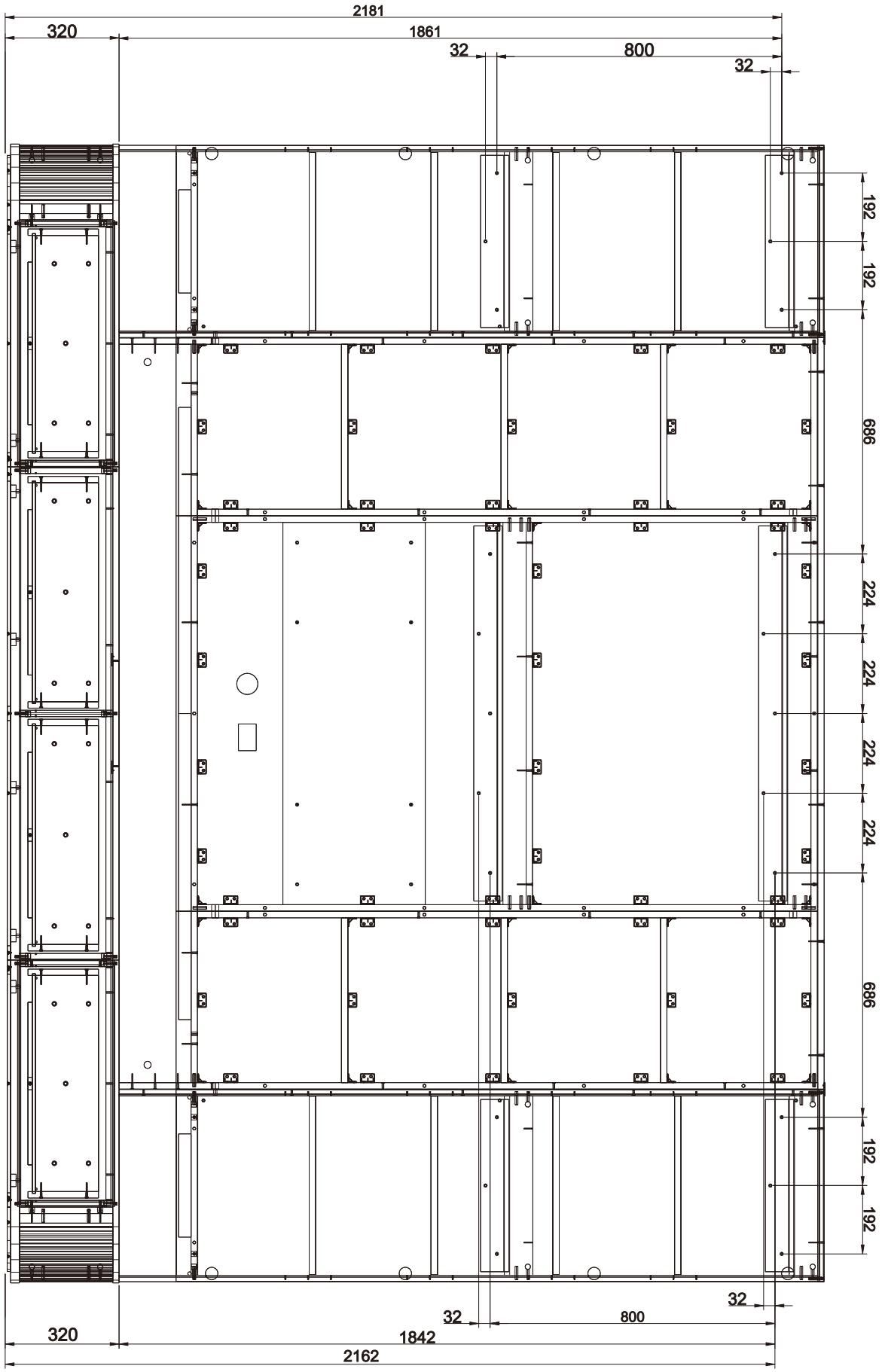
2181
320
1861
32
800
32
192
192
686
224
224
224
224
686
192
192
32
800
32
320
1842
2162

36.

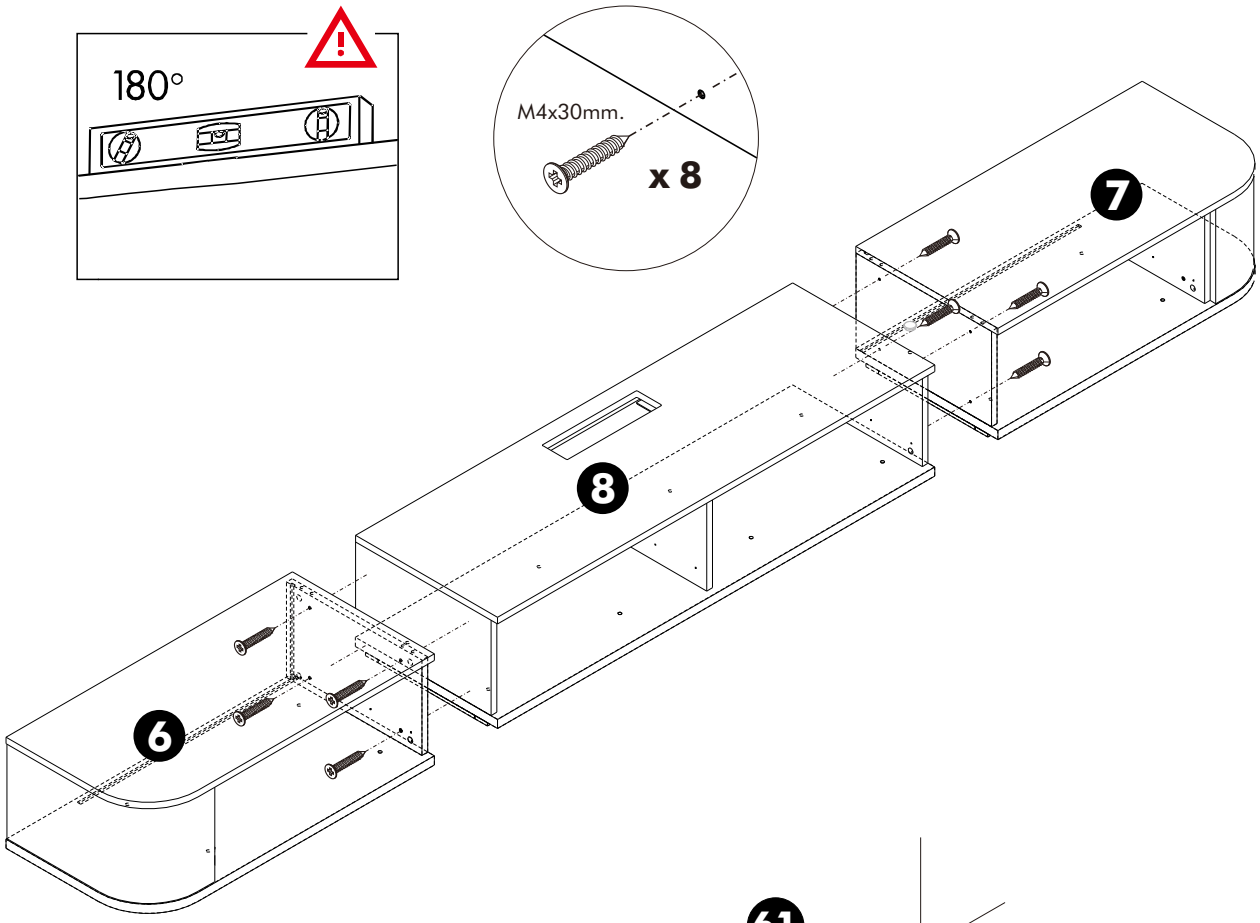
180°
M4x30mm.
x 8
7
8
6

37.

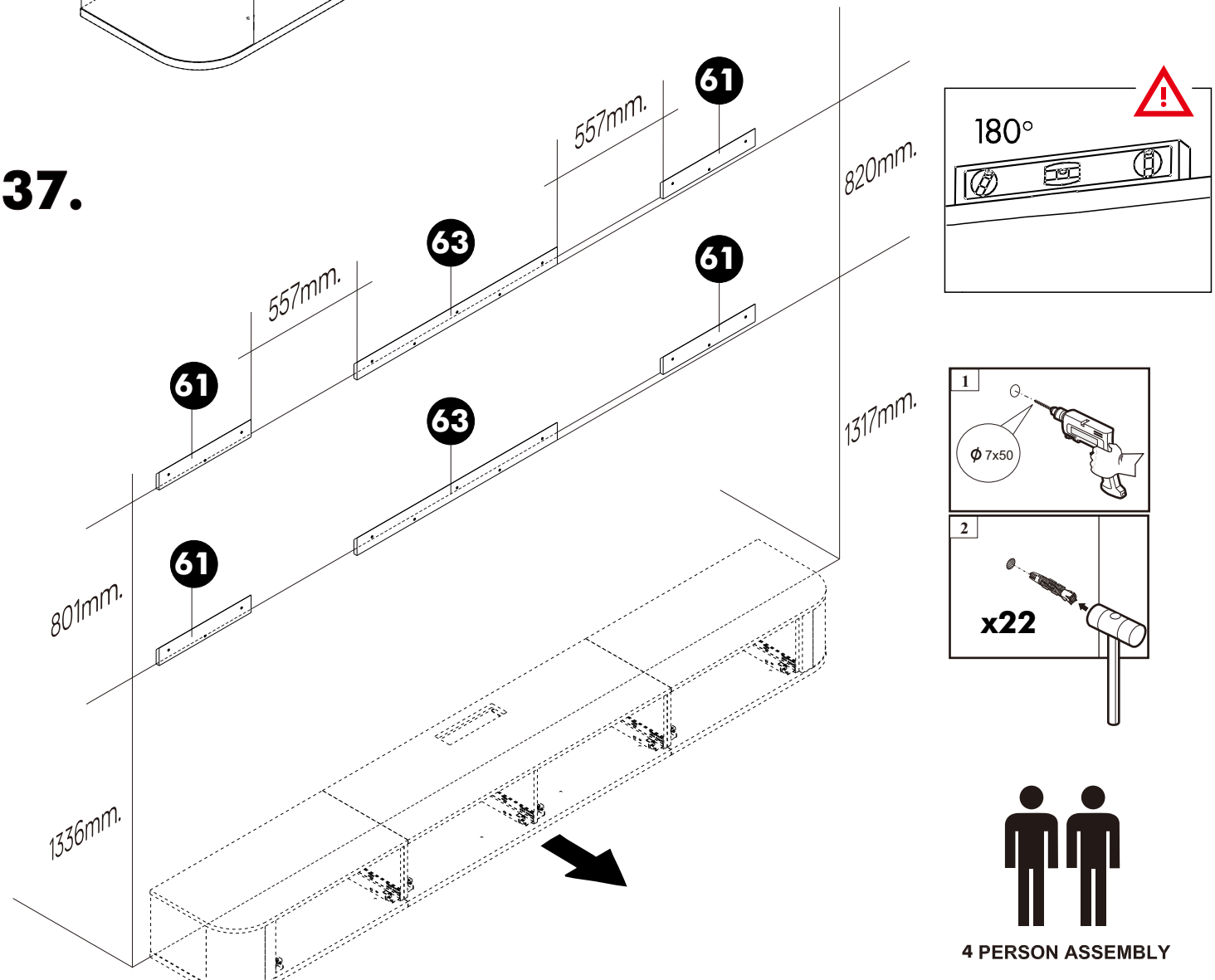
180°
557mm.
61
820mm.
63
557mm.
61
61
63
1317mm.
801mm.
61
1336mm.
1
Ø 7x50
2
x22
4 PERSON ASSEMBLY

38.

4 PERSON ASSEMBLY

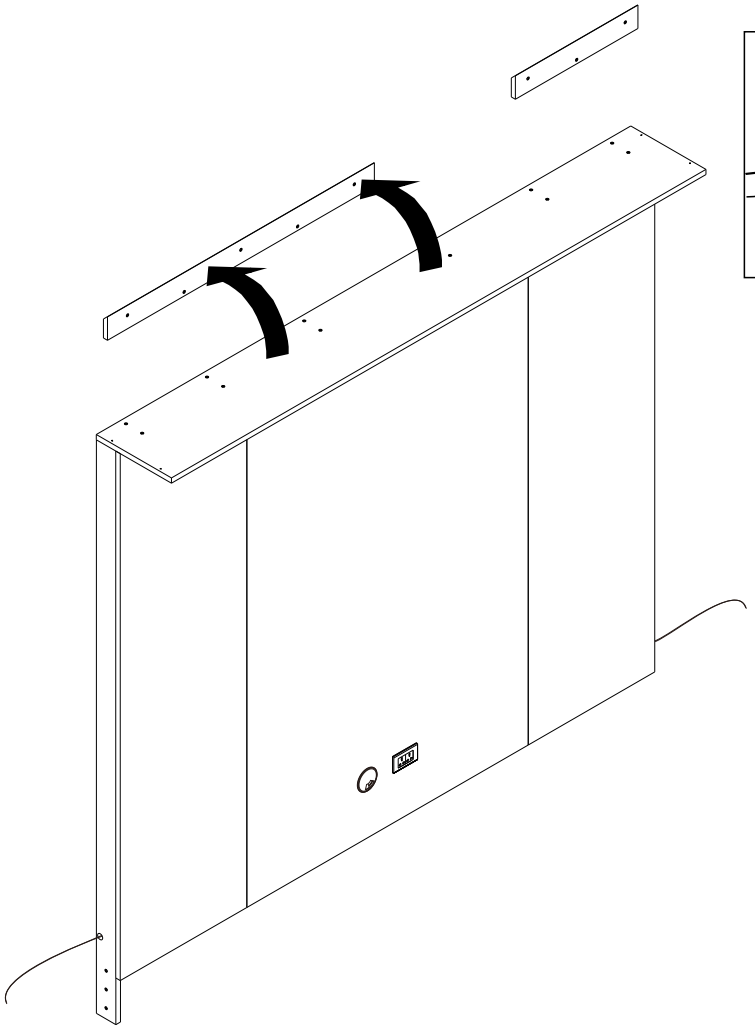

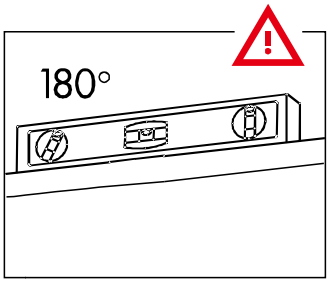

39.

4 PERSON ASSEMBLY

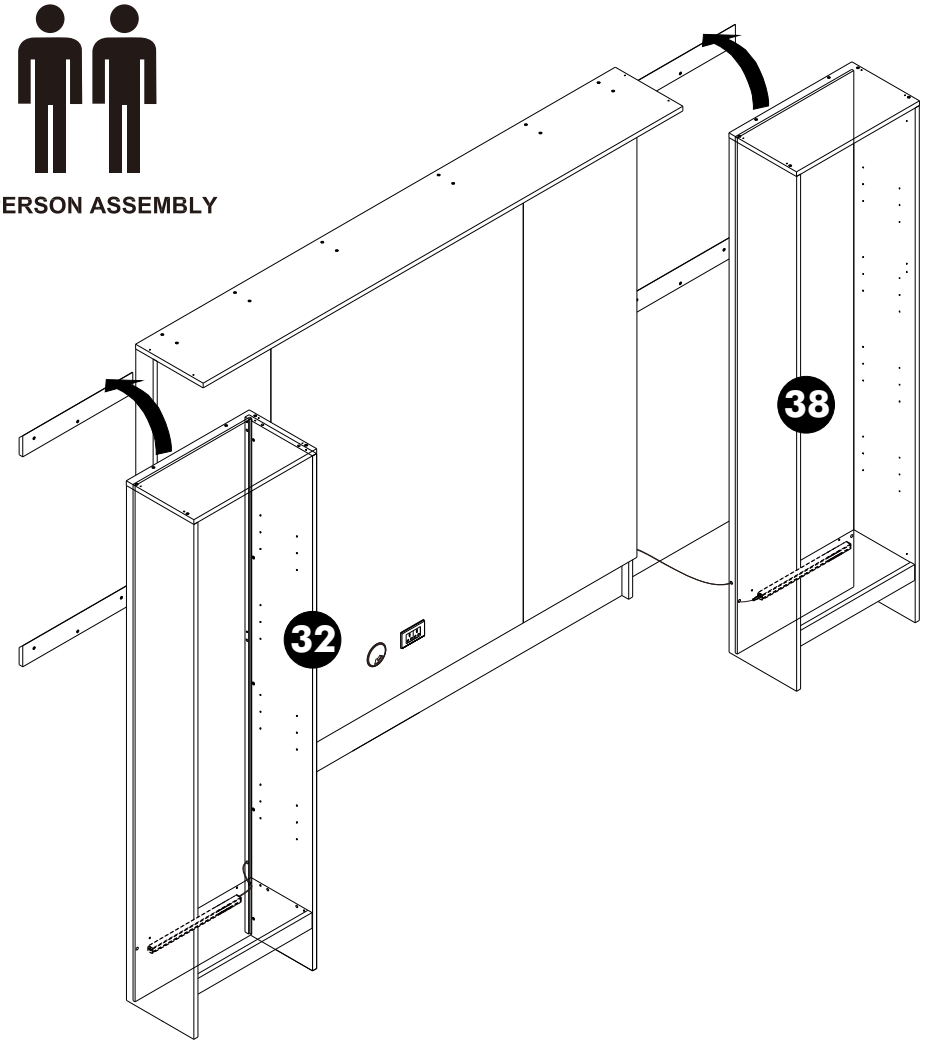

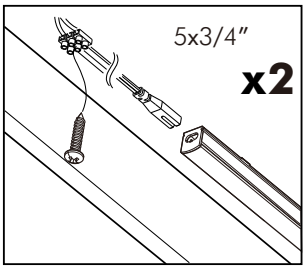

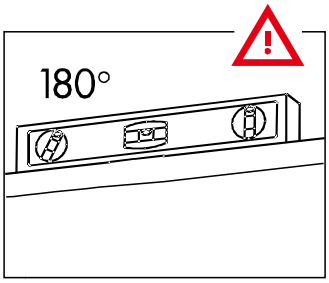

40.

4 PERSON ASSEMBLY

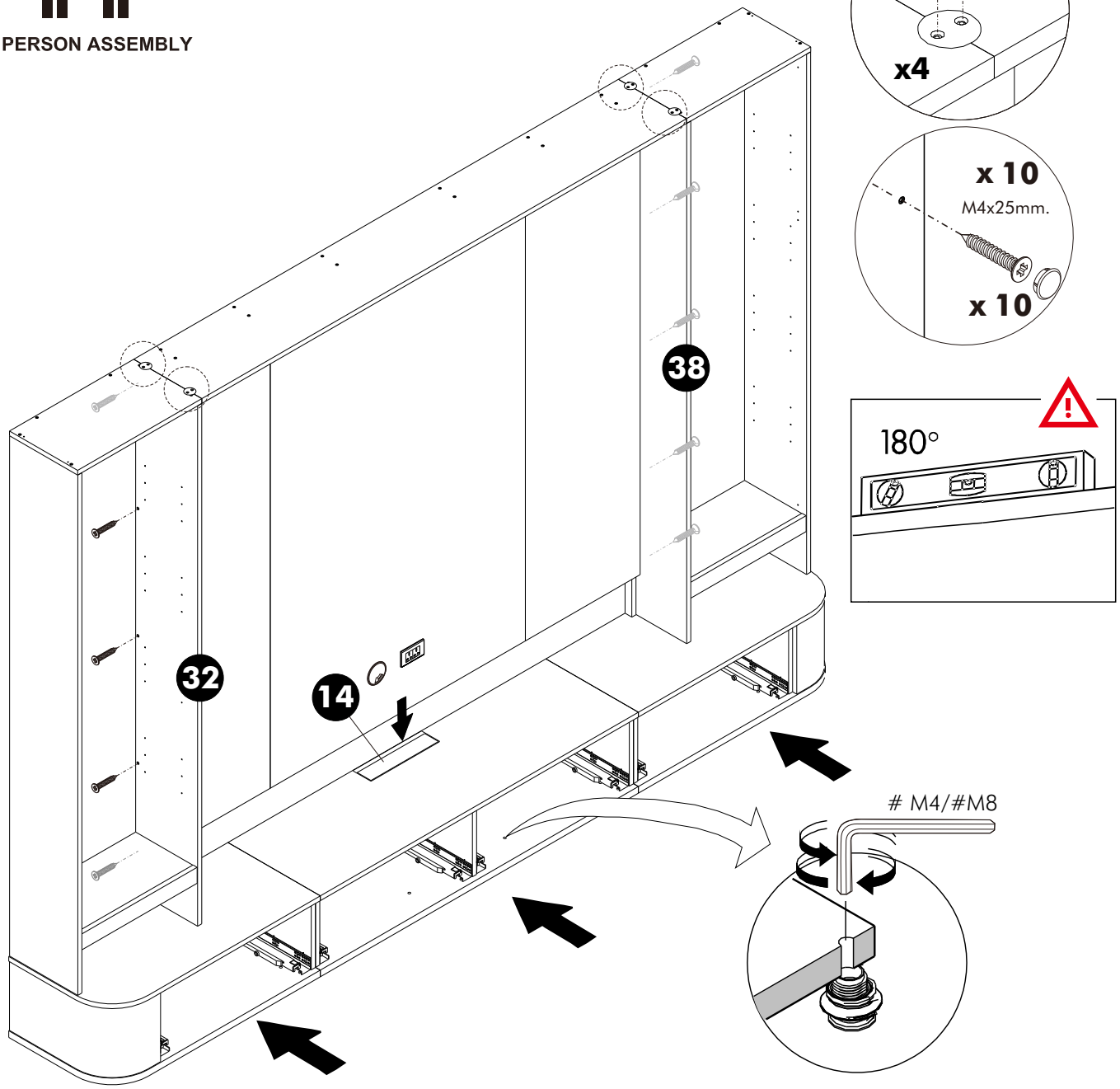

41.

ASSEMBLY

-DRAWER SET

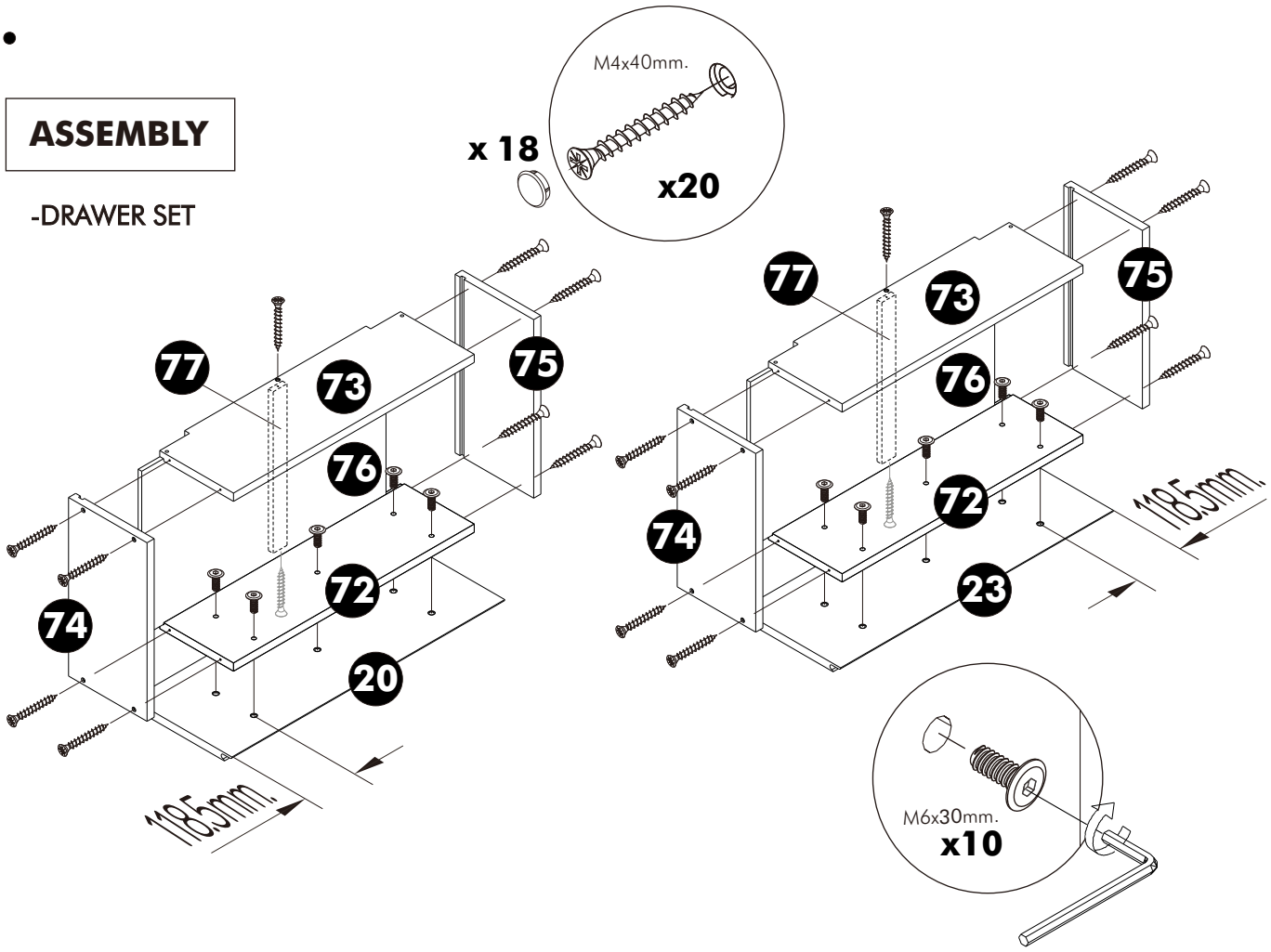

42.

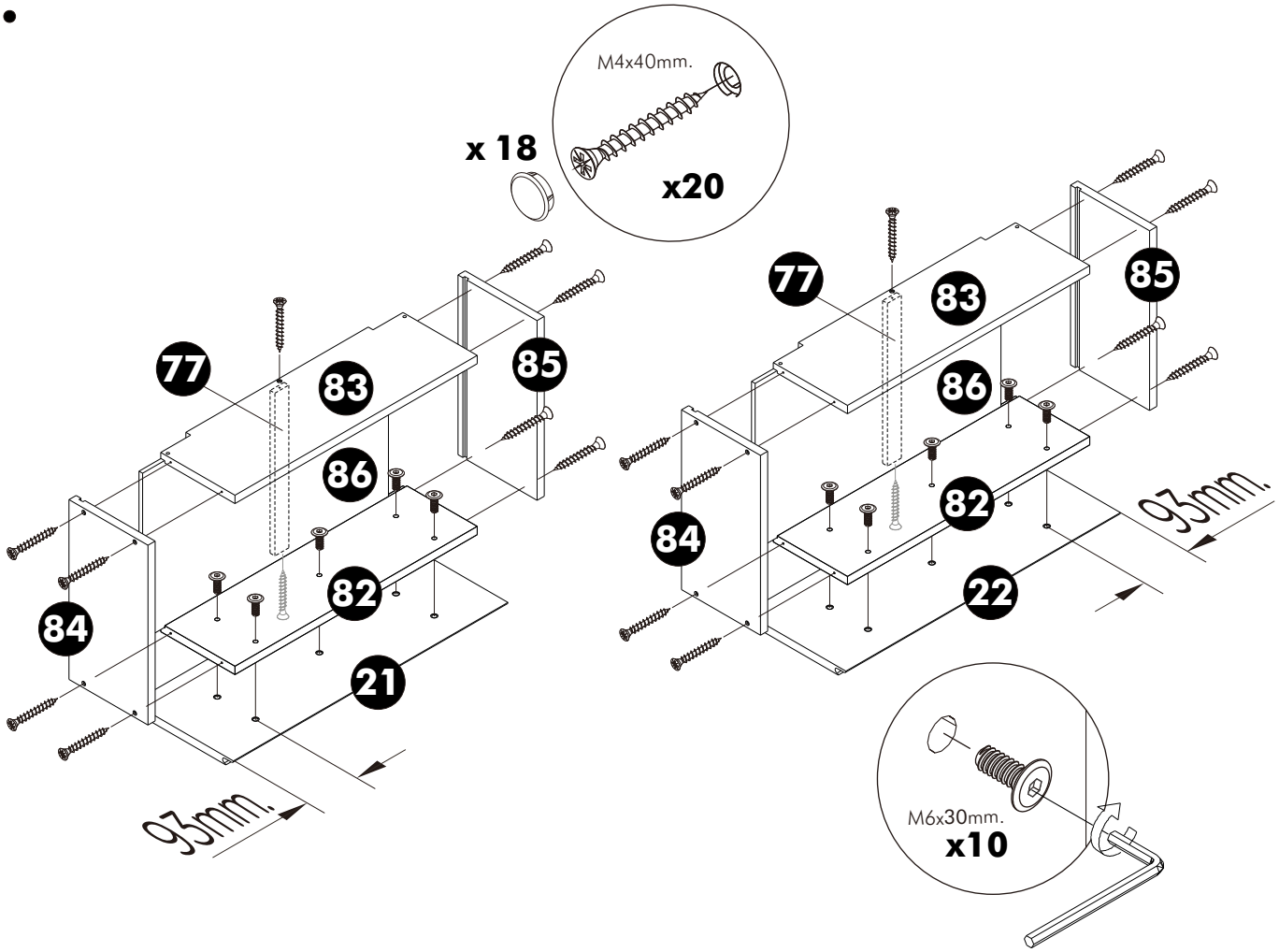

43.

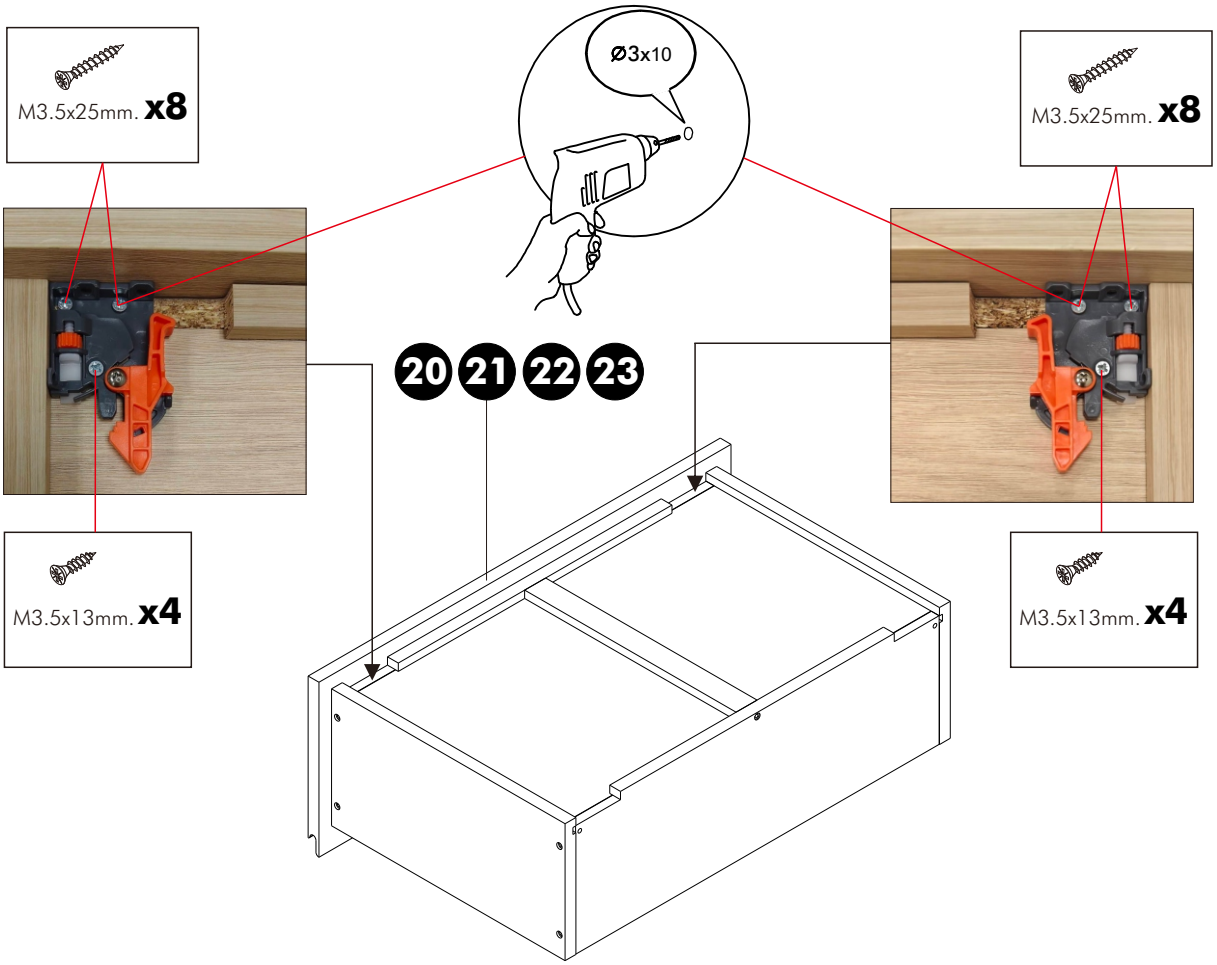
M3.5x25mm. x8
Ø3x10
M3.5x25mm. x8
20 21 22 23
M3.5x13mm. x4
M3.5x13mm. x4

44.

TYPE:A

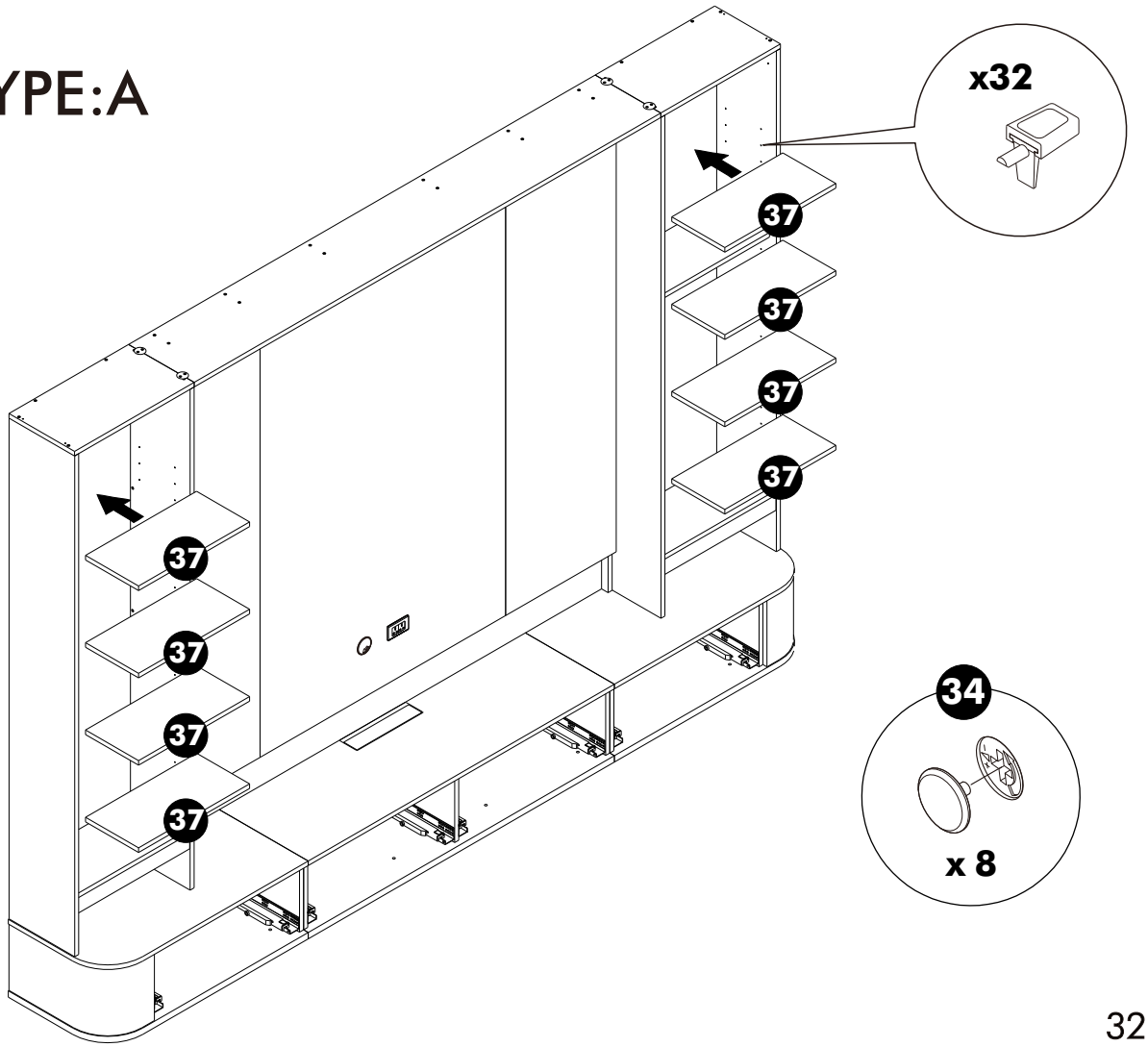
x32
37
37
37
37
37
37
37
37
34
x 8

45.

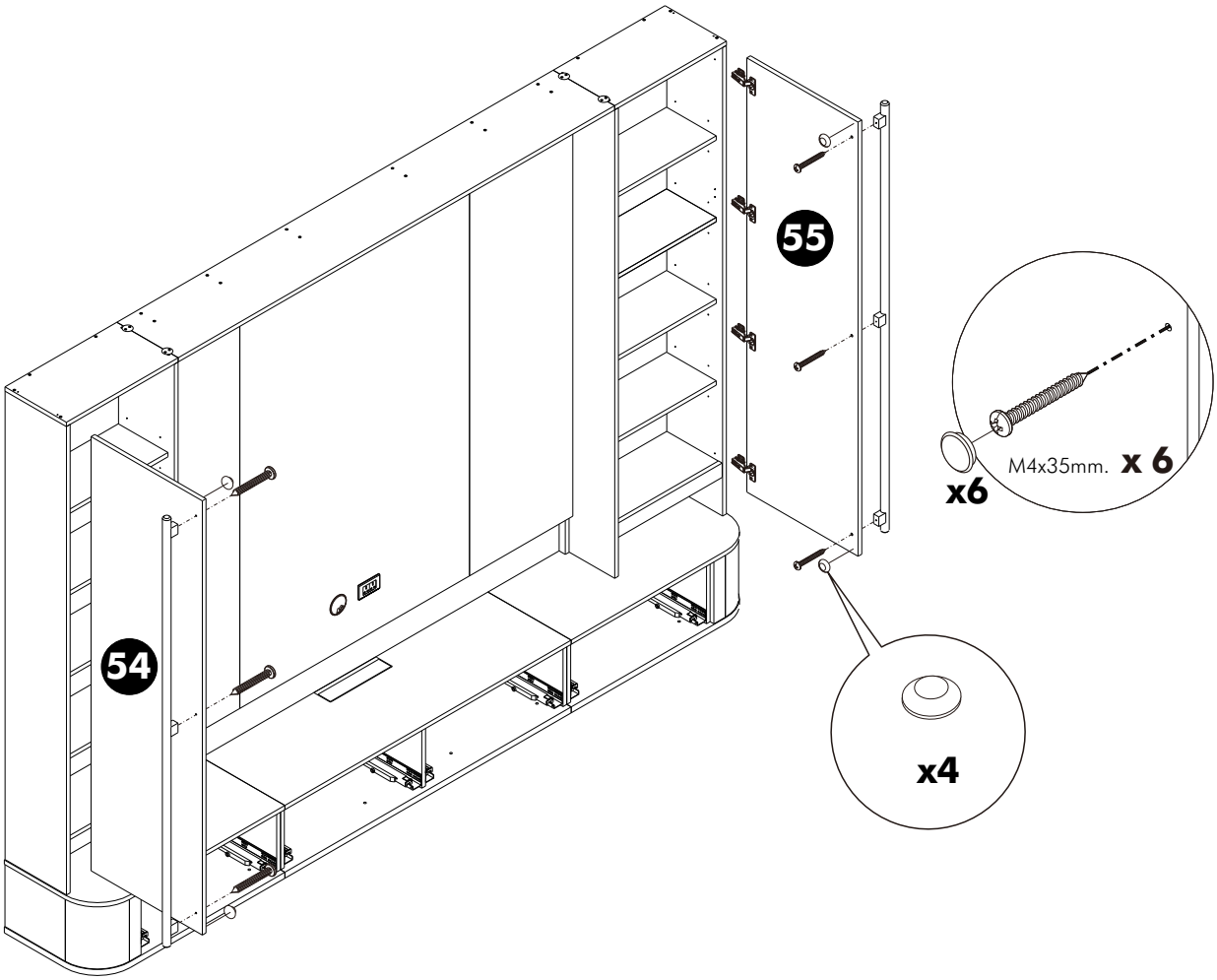

46.

