DALGO-P

Working table 140 cm.

Right

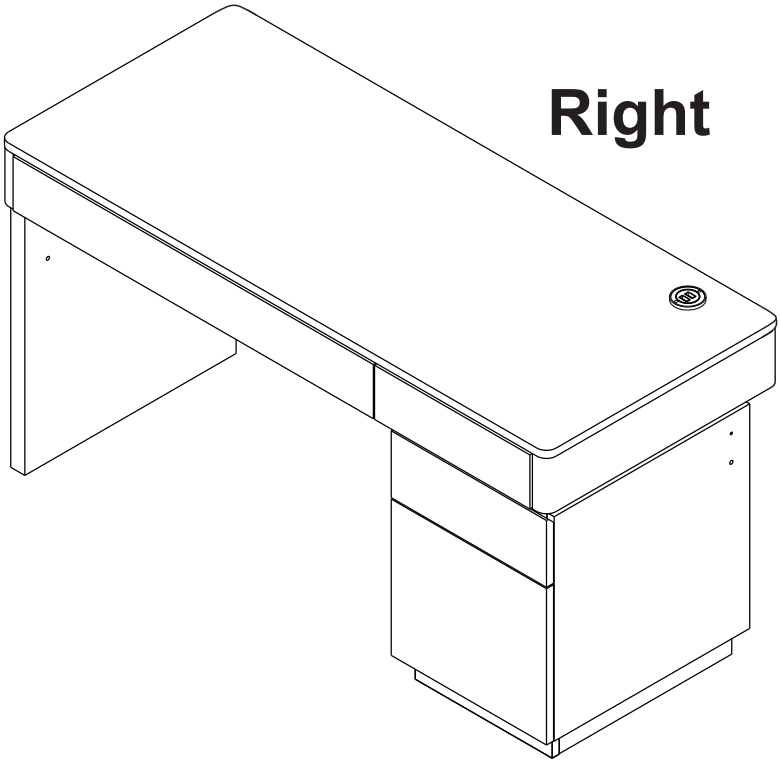

Left

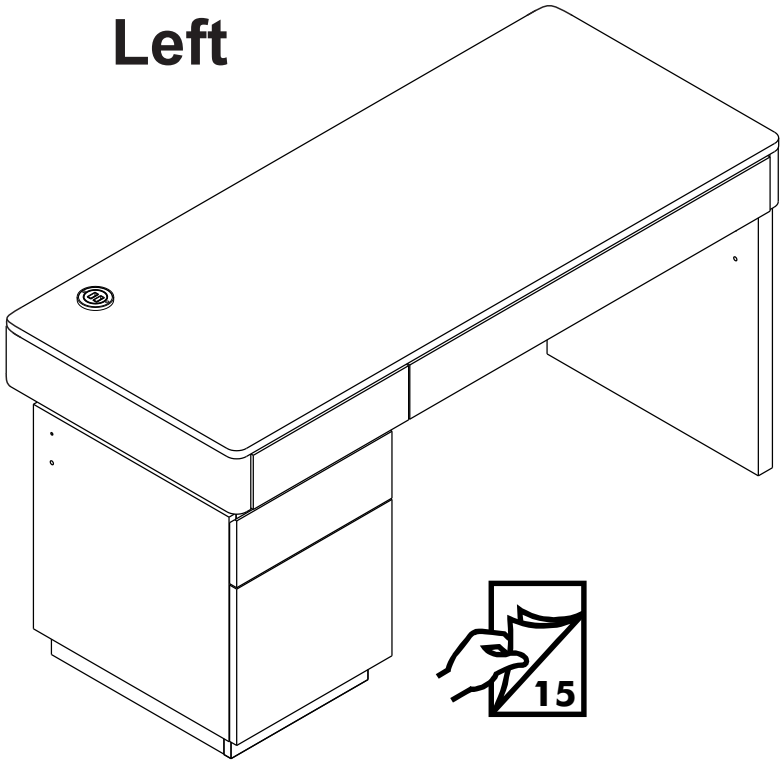

Indexlivingmall

CONNECT SYSTEM

1

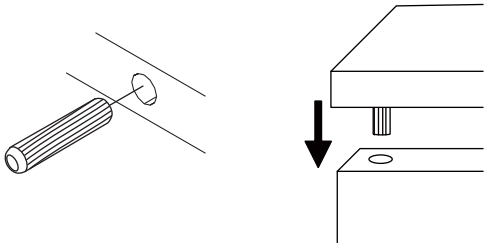

2

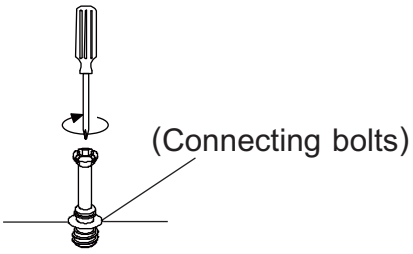

3

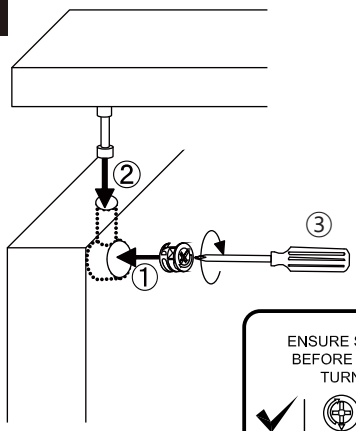

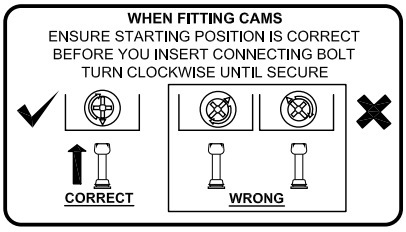

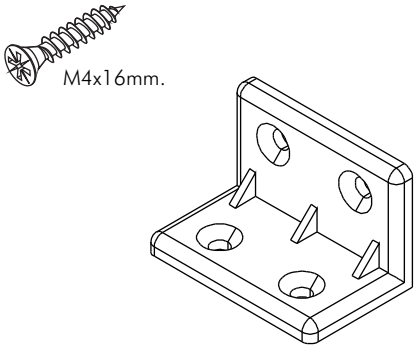

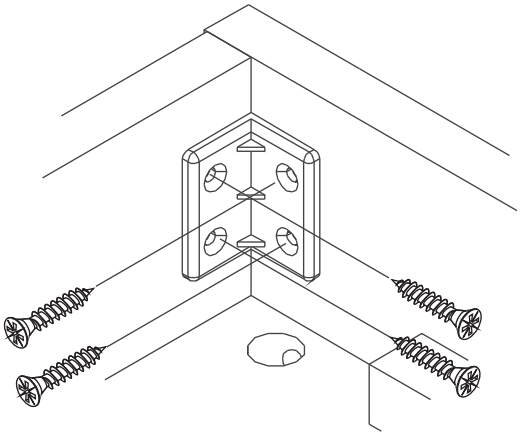



M4x16mm.

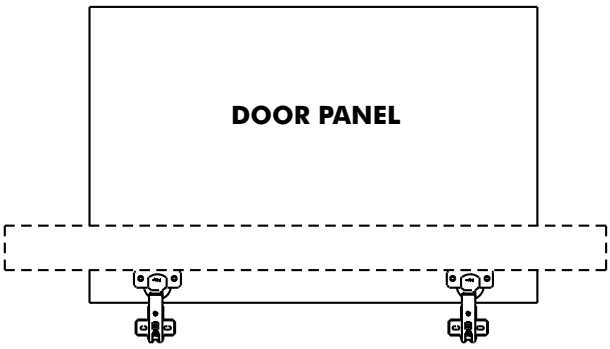

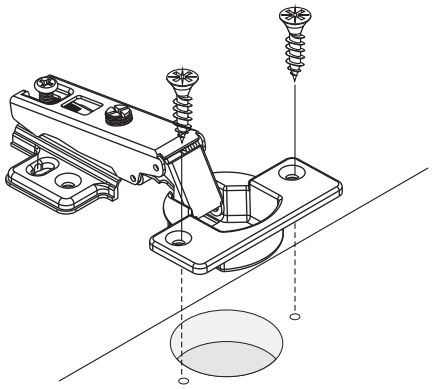

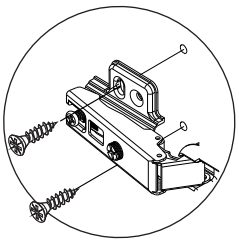

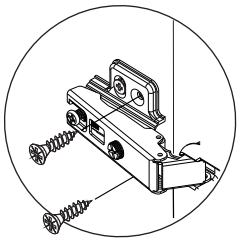



M3.5x13mm.

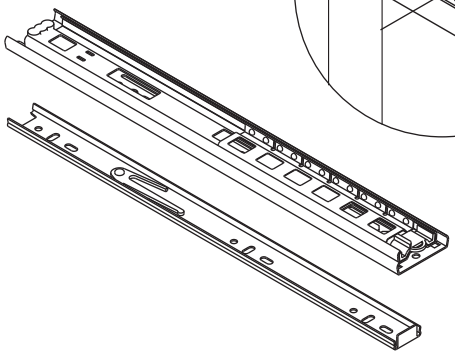

1

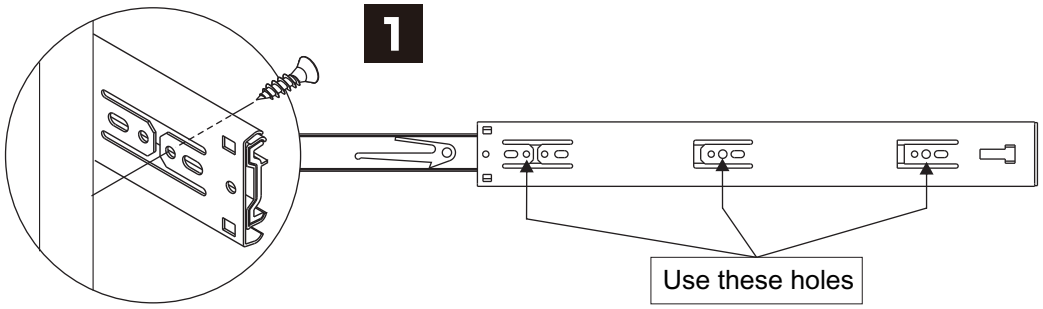

2

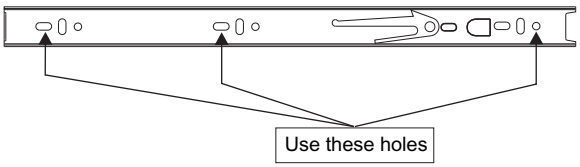

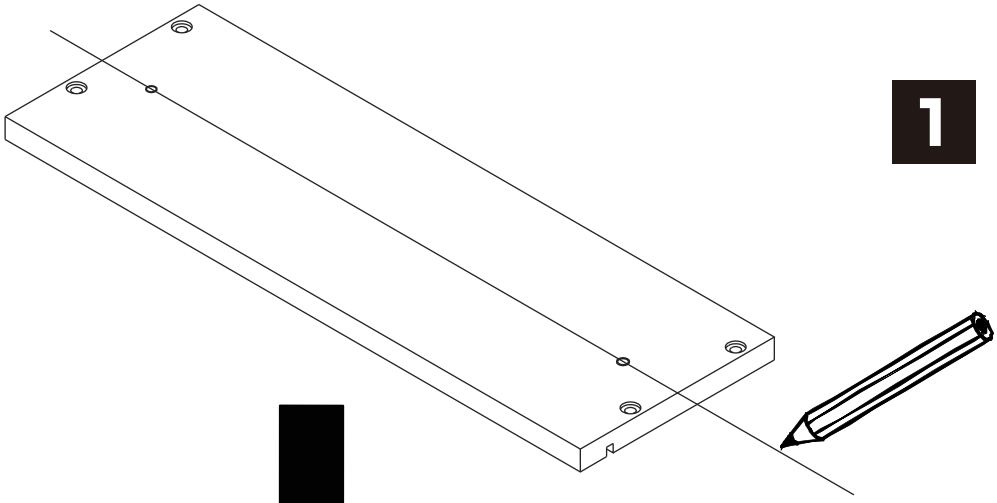

1

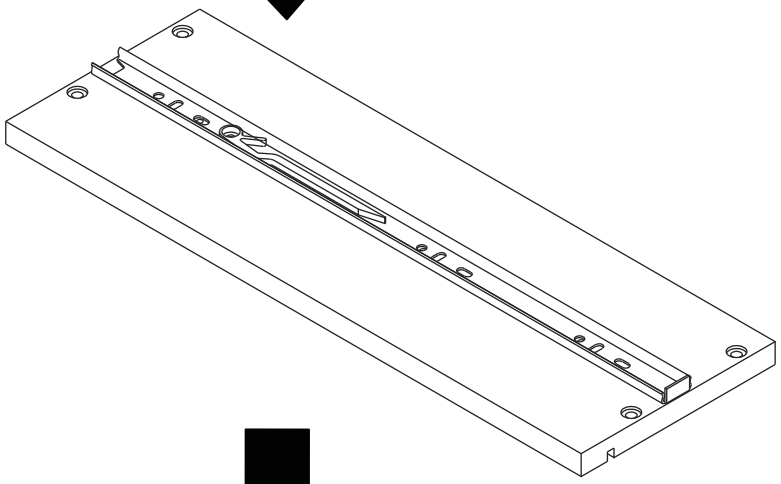

2

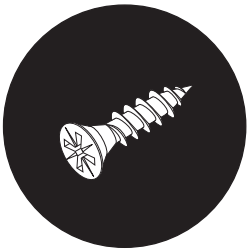

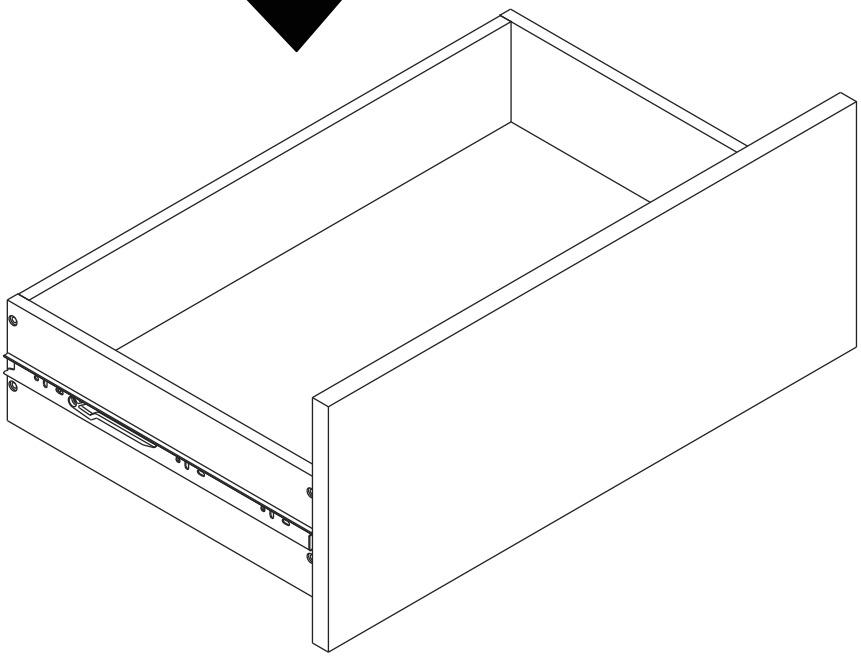

HARDWARE

-BODY SET

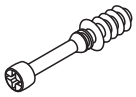

x 32



x 32

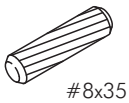

#8x35

x 36

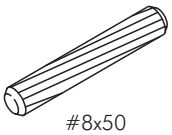

#8x50

x 2

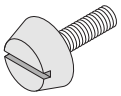

x 6



#5x18mm.

x 2

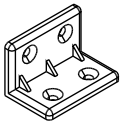

x 23



M4x16mm.

x 92



M4x40mm.

x 28



M4x50mm.

x 14

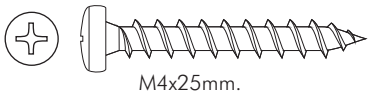

M4x25mm.

x5



x2

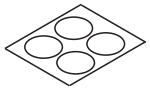

x 4

HARDWARE

-DOOR SET



x 4

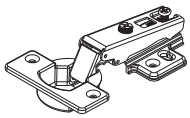

x 2

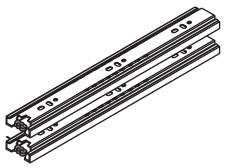

x3



M4x16mm.

x12

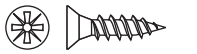

M3.5x13mm.

x36

HARDWARE

-DRAWER SET

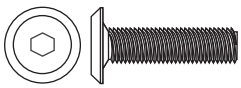

M6x23mm.

x 2

HARDWARE

-LAMP SET

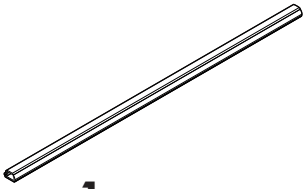

x 1

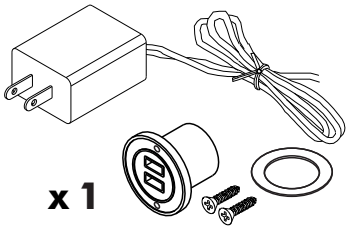

x 1

ASSEMBLY

-BODY SET

1.

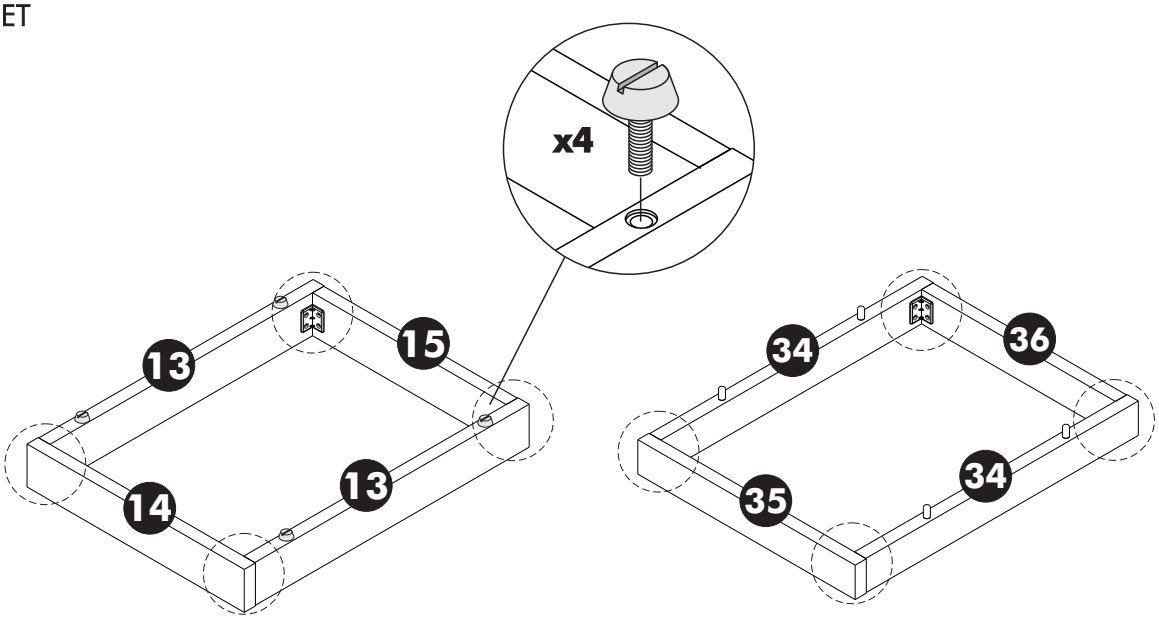

2.

****Right**

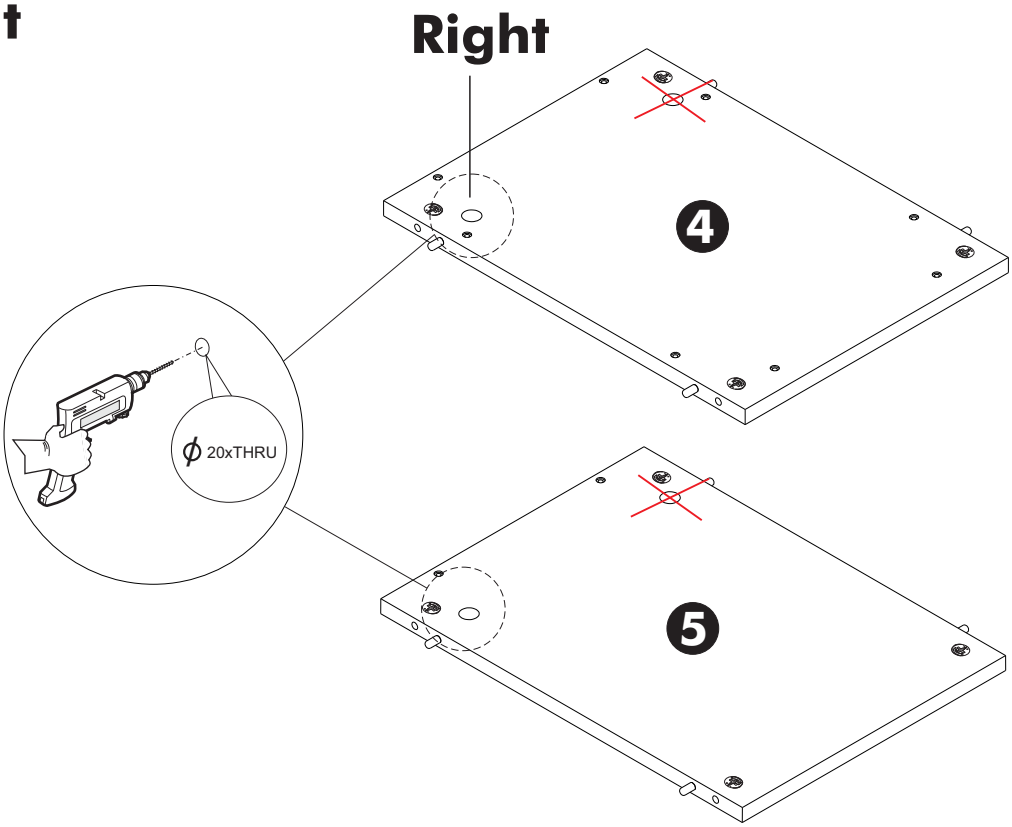

3.

**Right

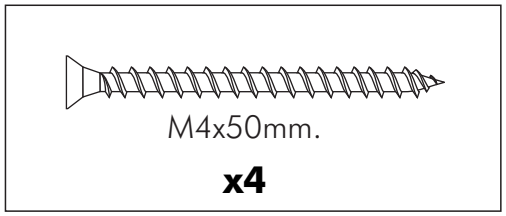

4.

**Right

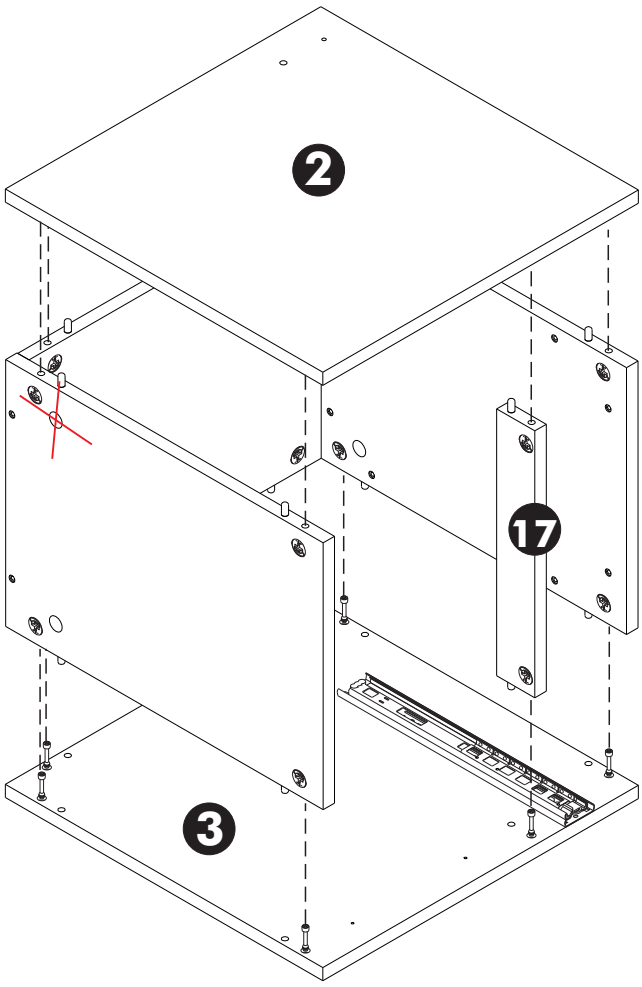

5.

**Right

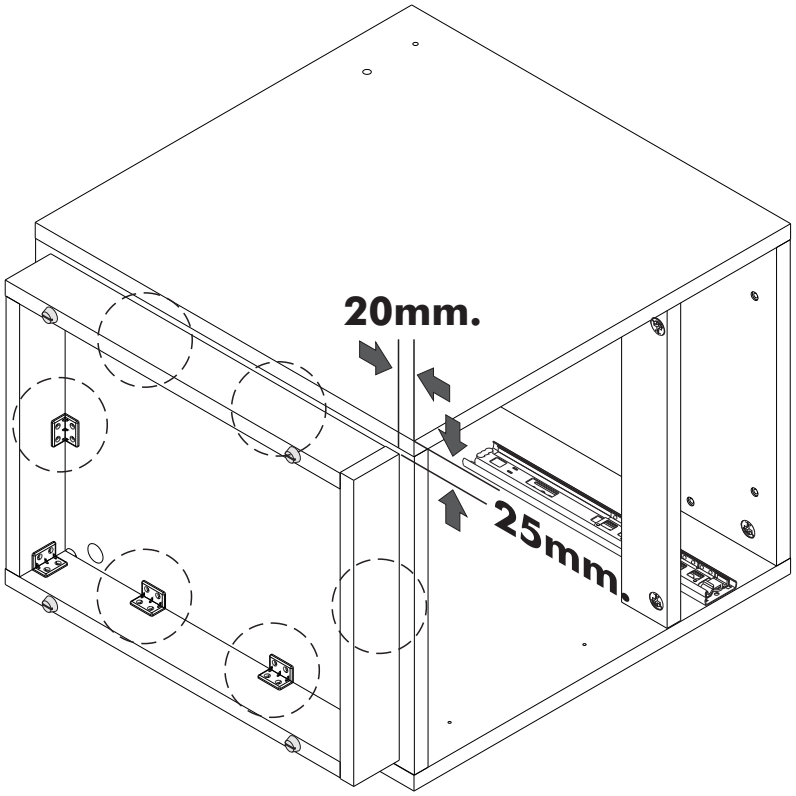

6.

**Right

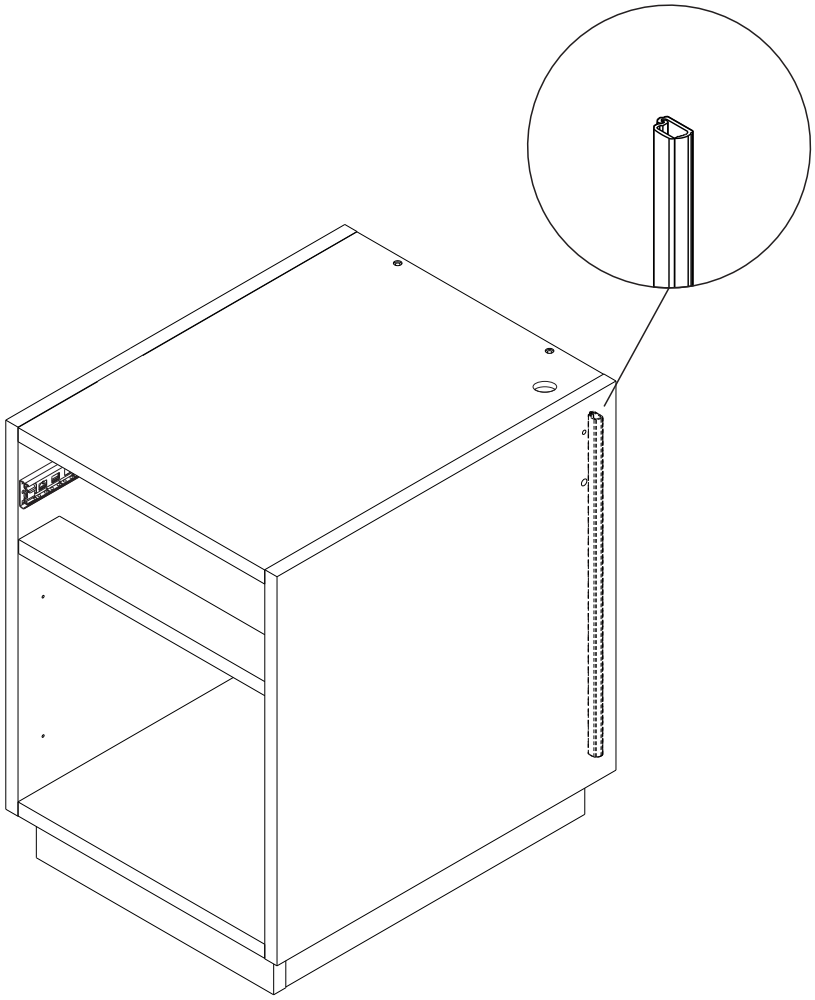

7.

**Right

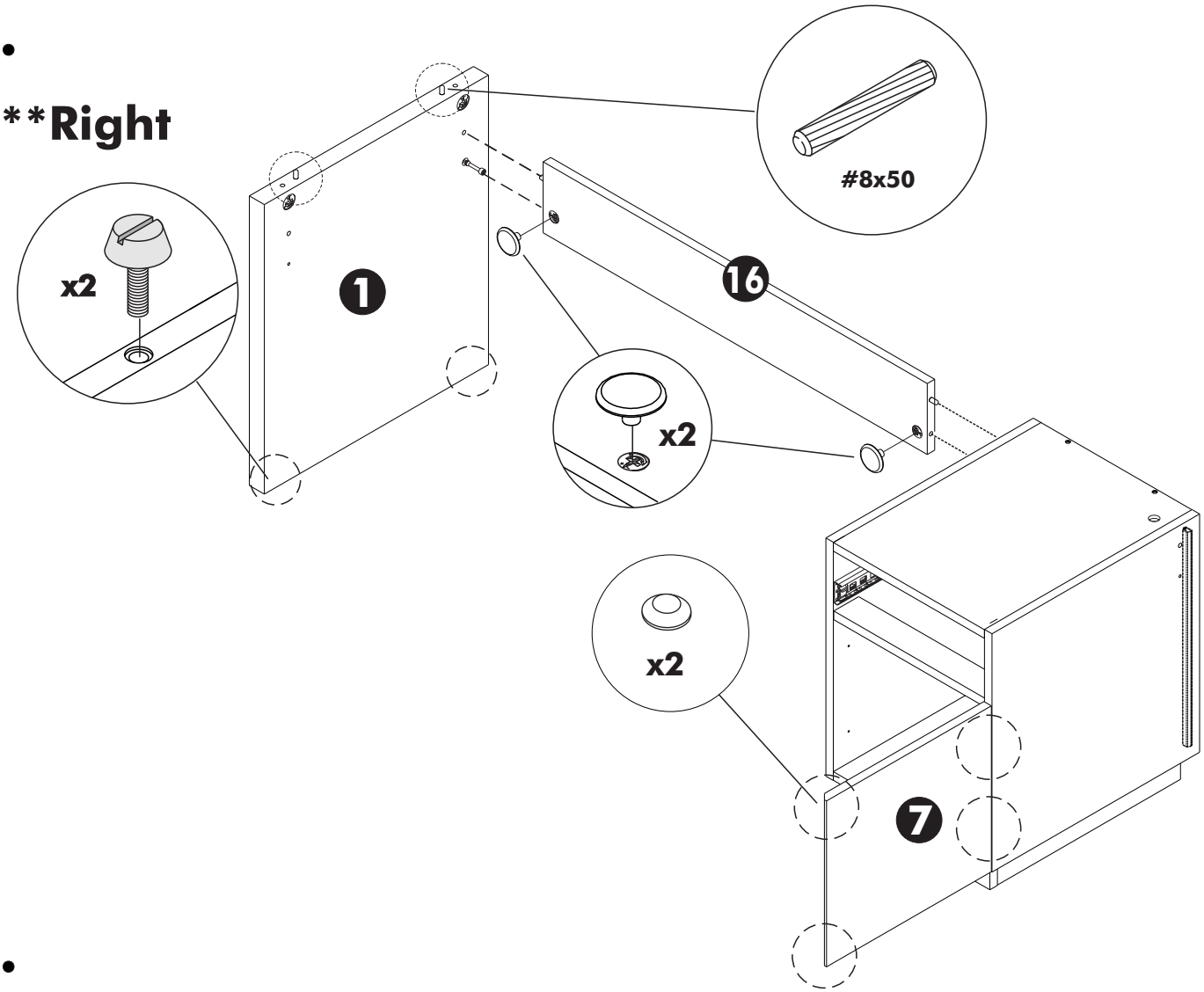

8.

**Right

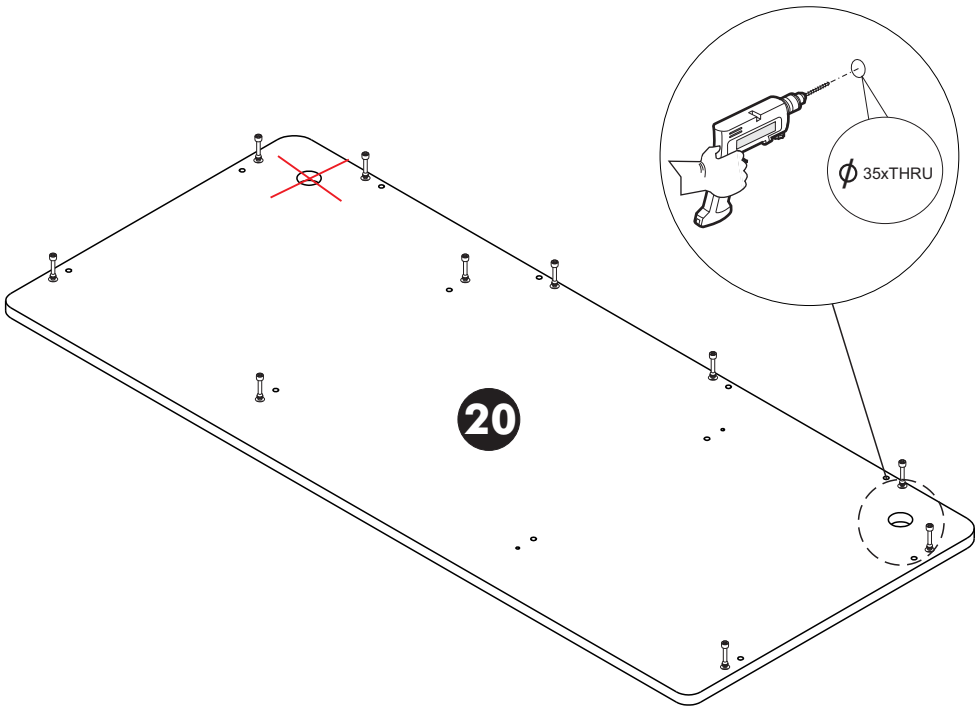

9.

**Right

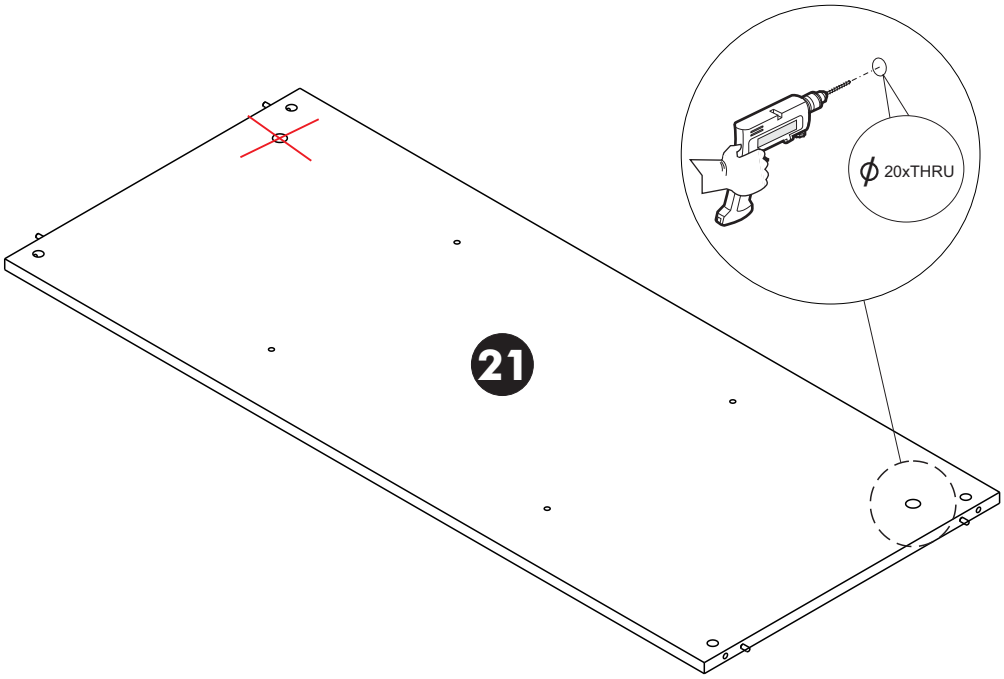

10.

**Right

**Front

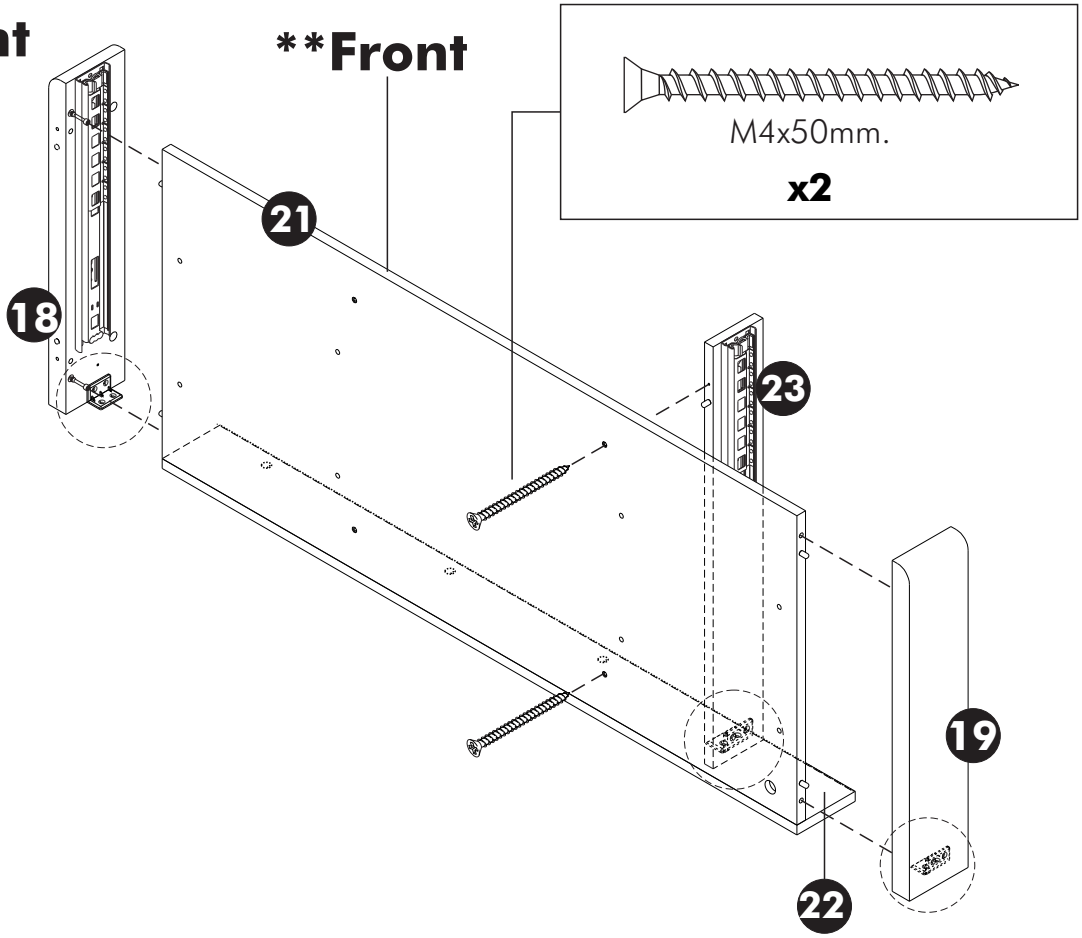

11.

****Right**

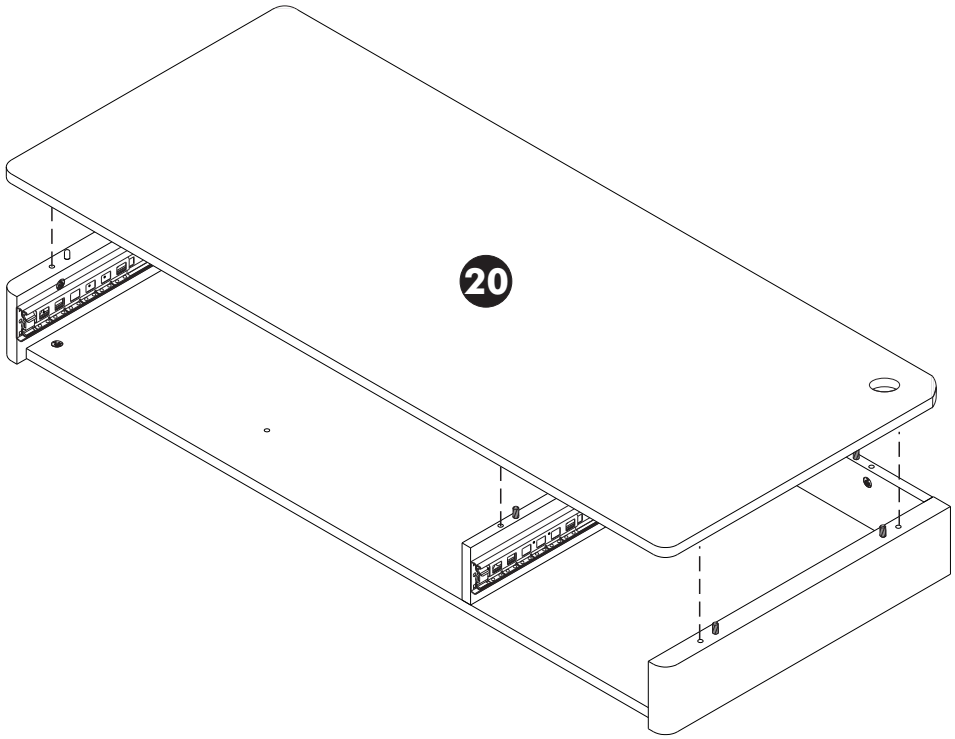

12.

****Right**

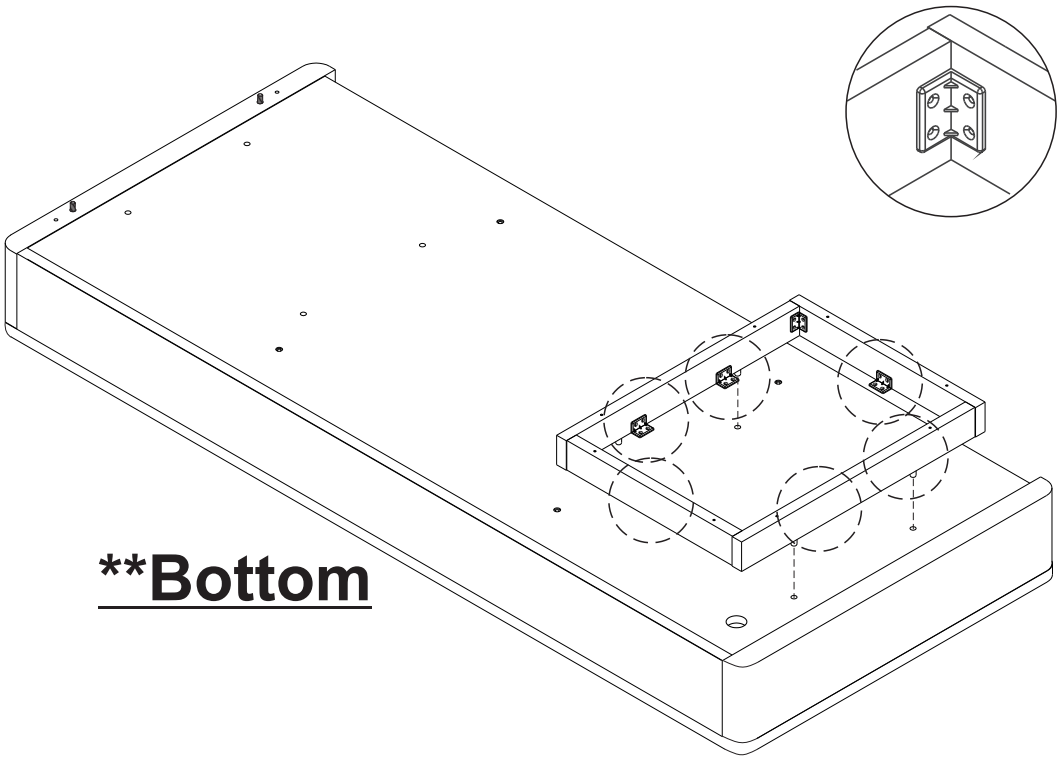

****Bottom**

13.

**Right

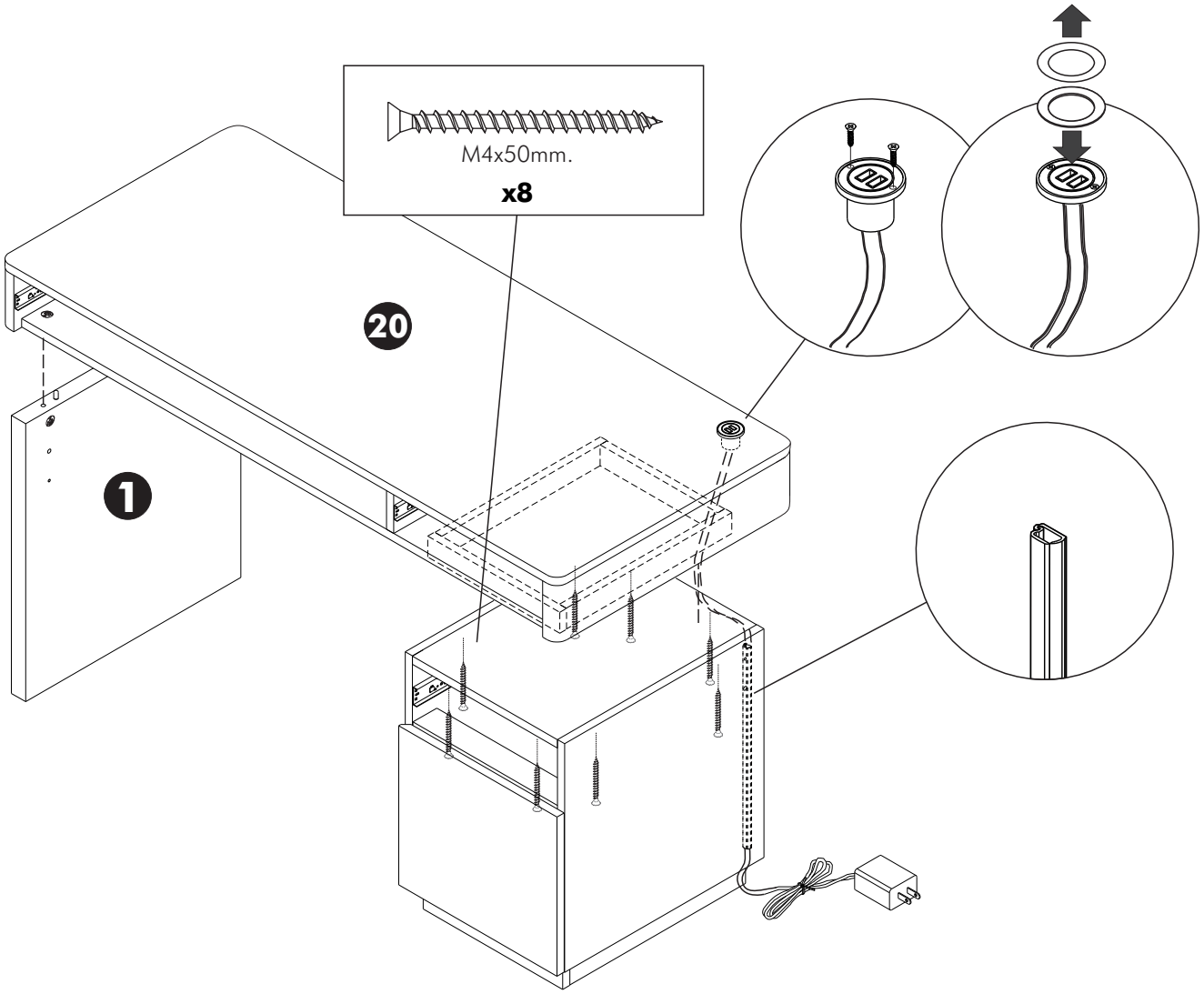

14.

**Right

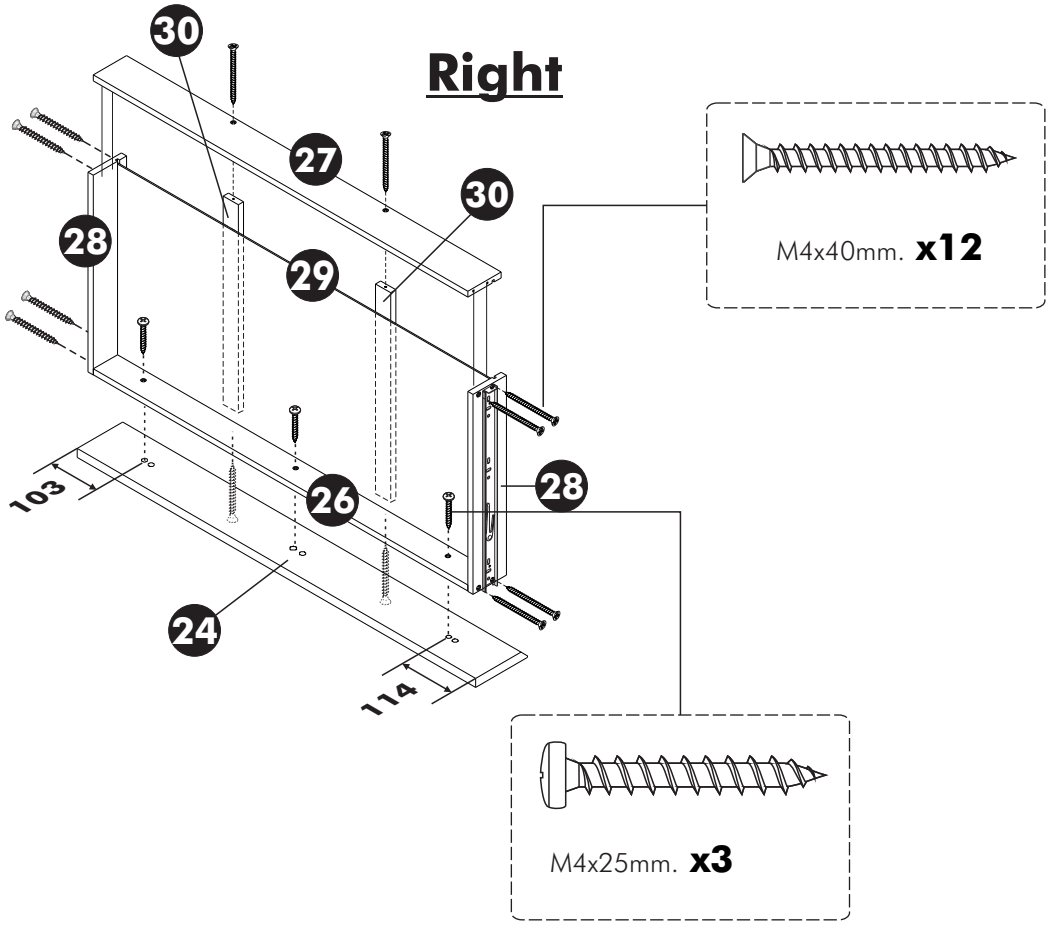

15.

**Right

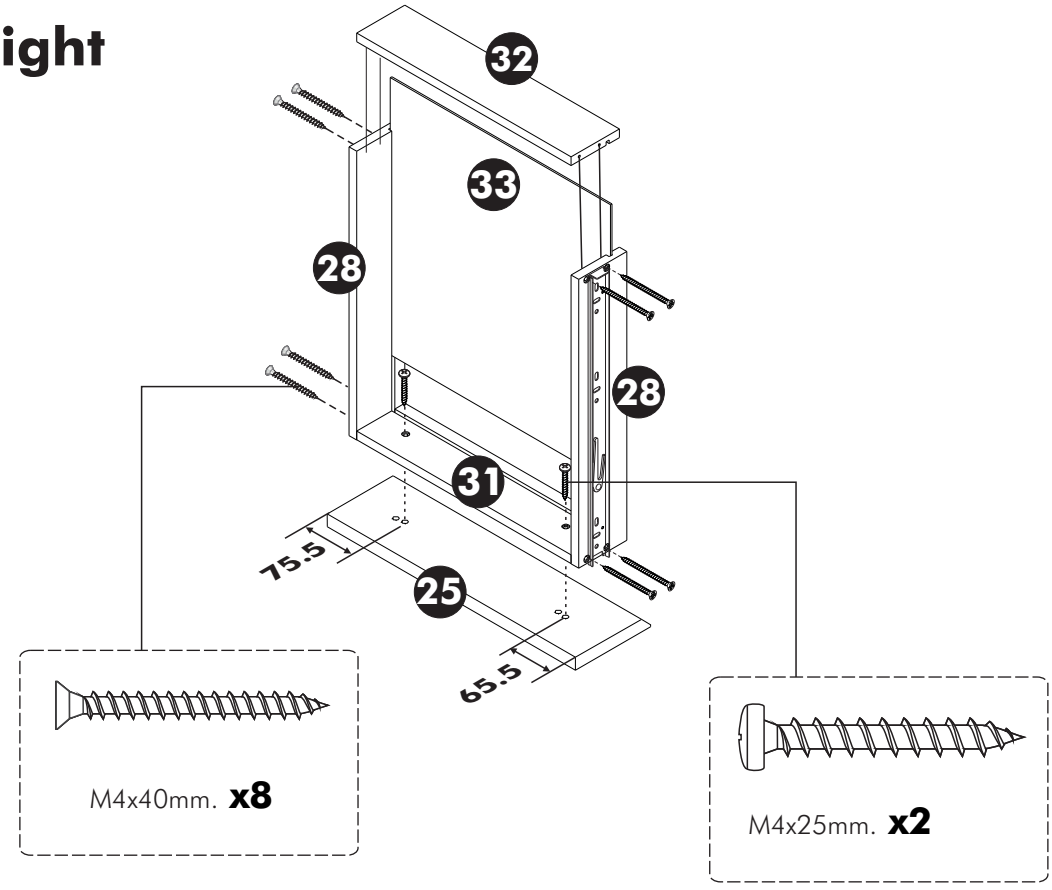

16.

**Right

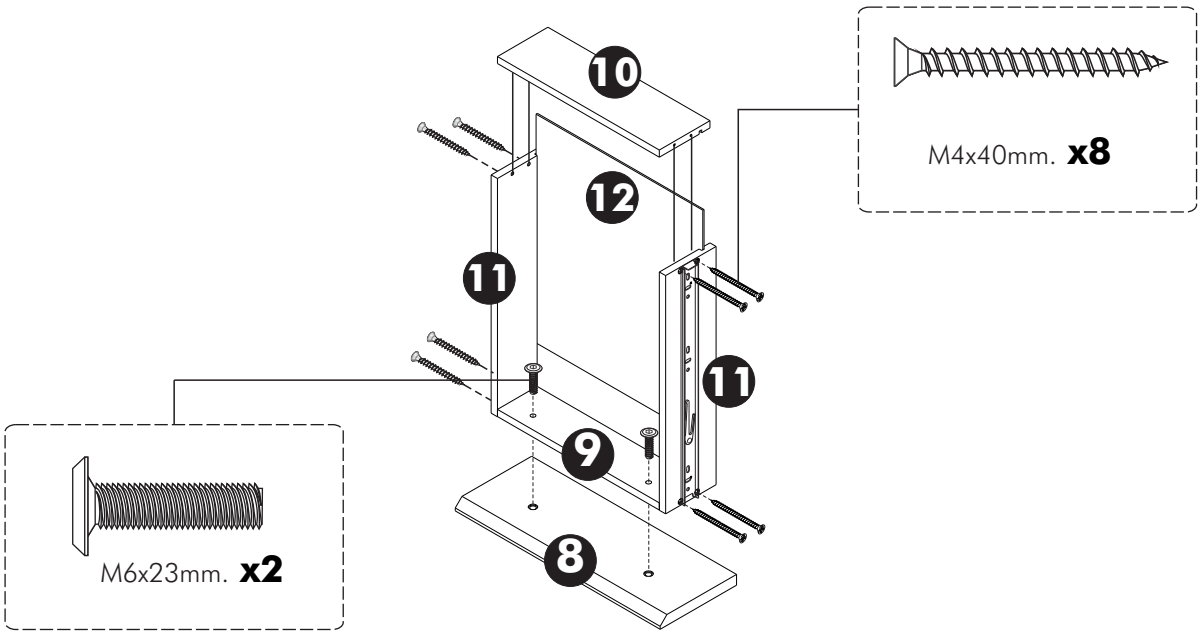

17.

**Right

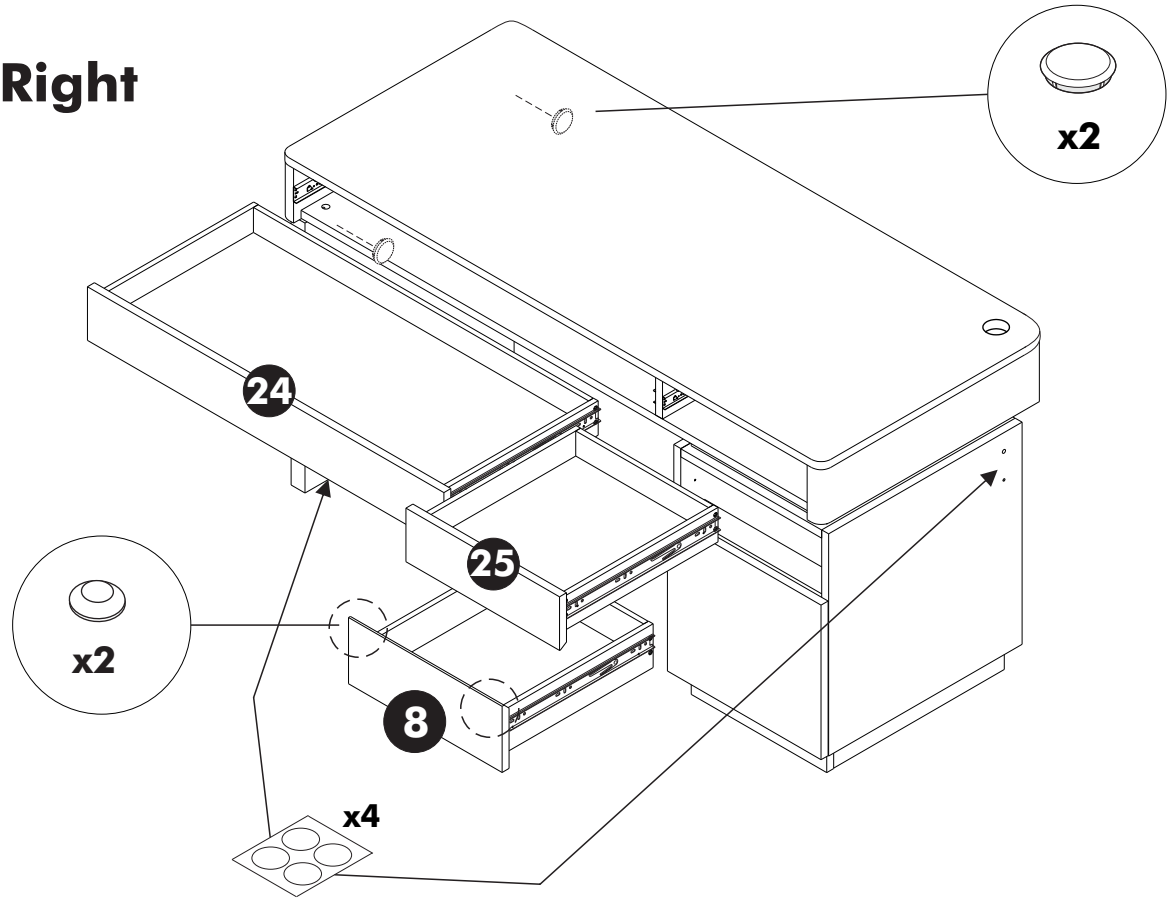

2.

**Left

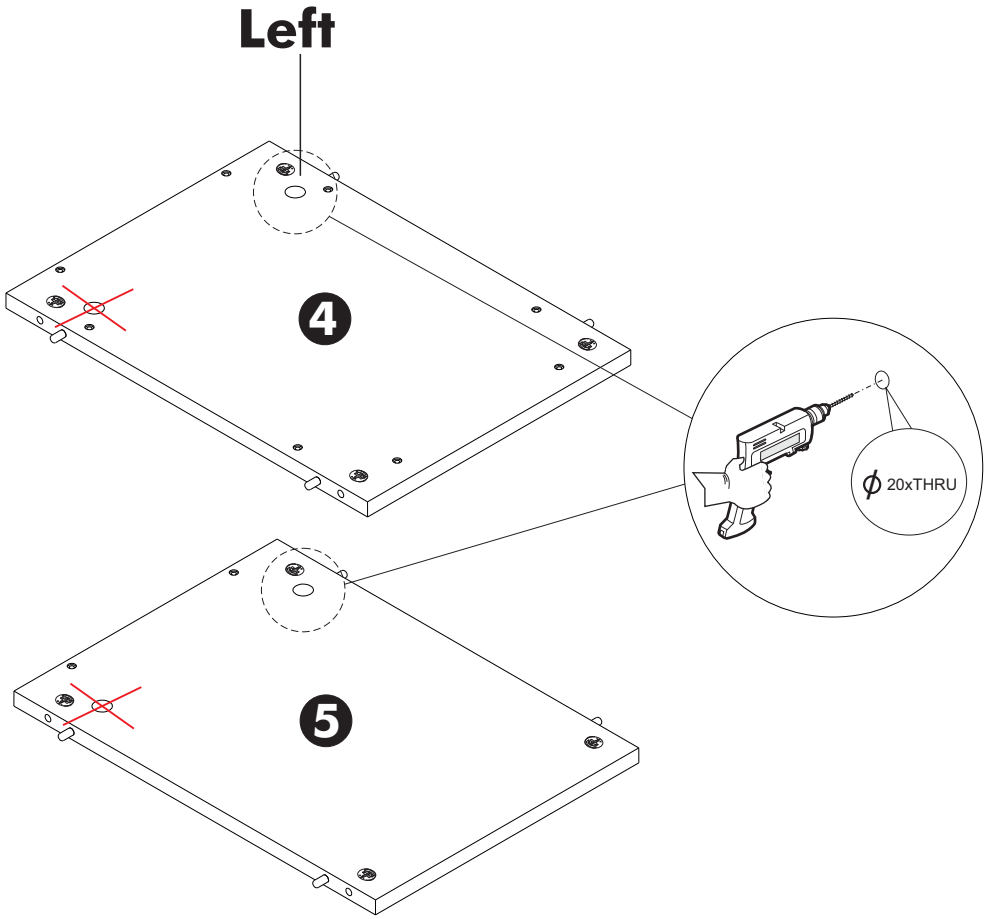

3.

**Left

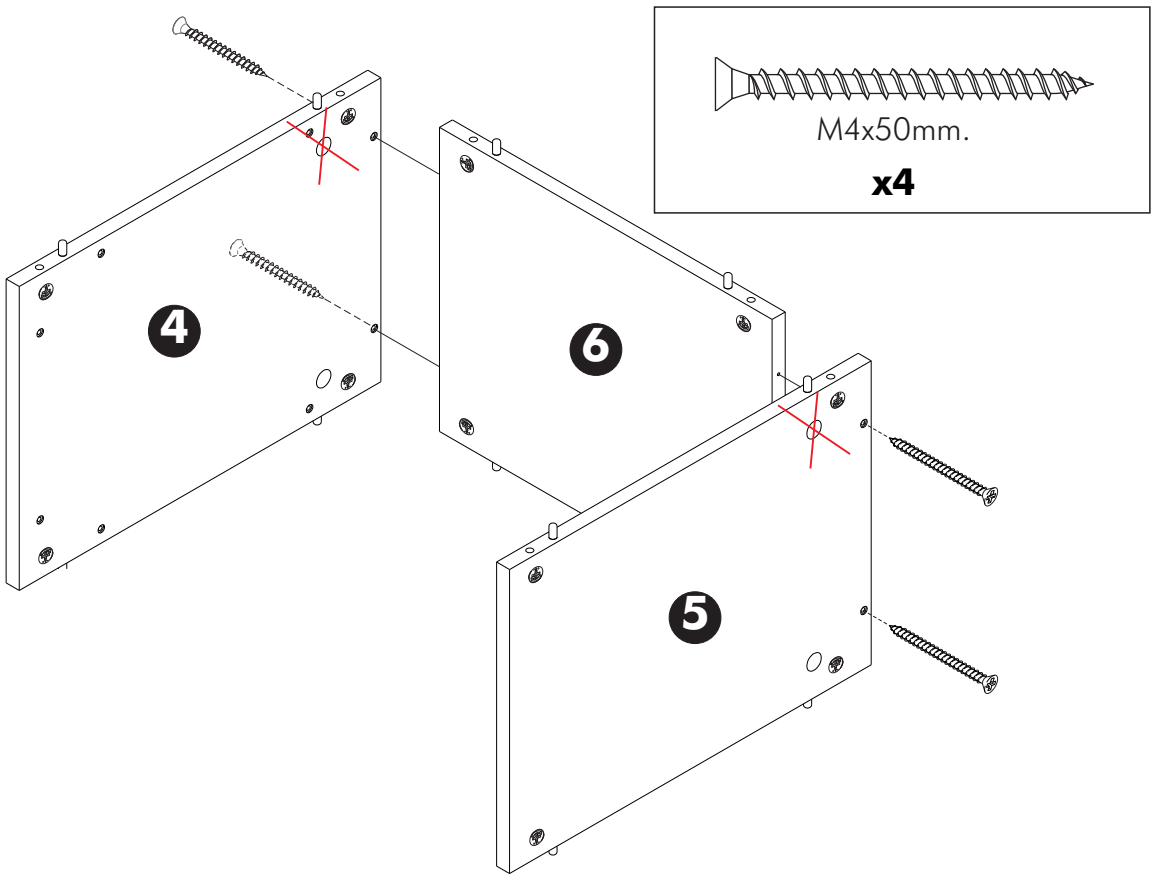

2.

**Left

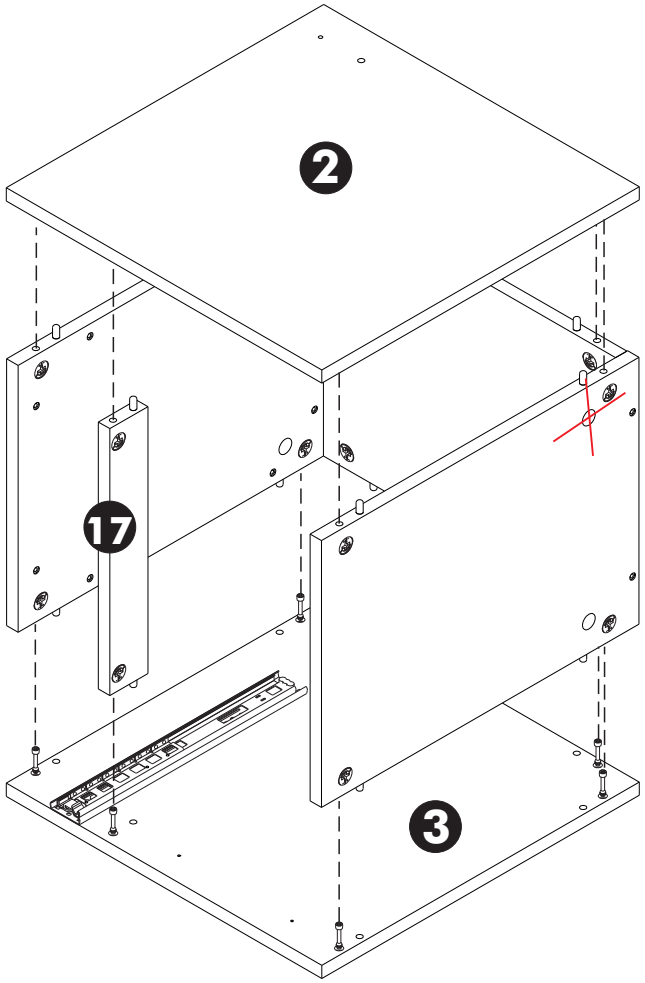

3.

**Left

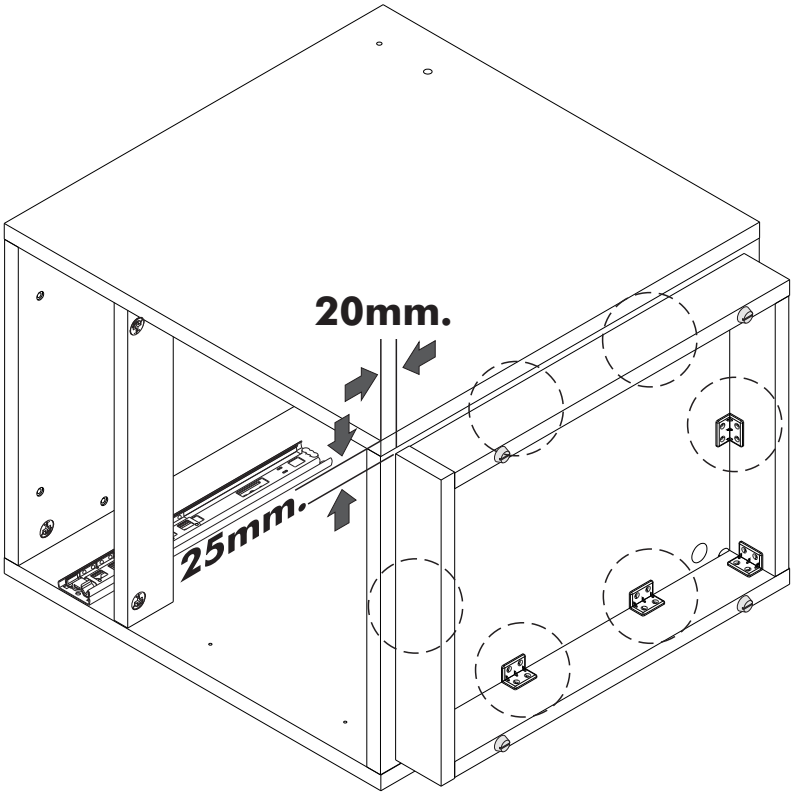

4.

**Left

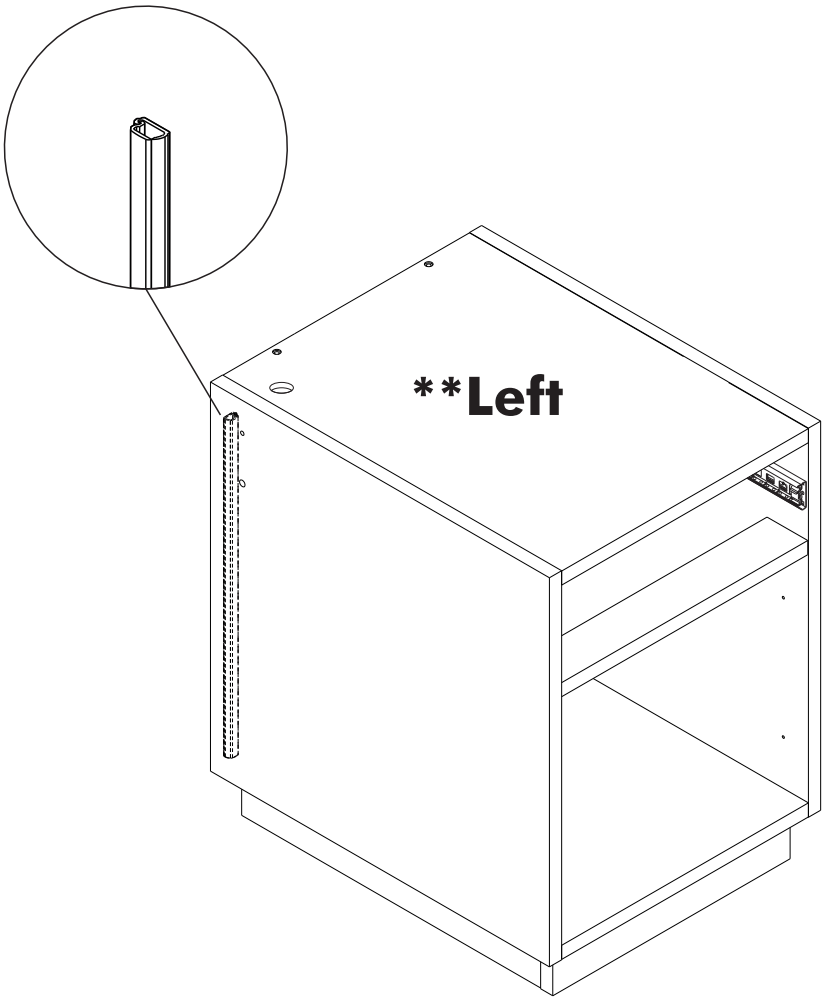

5.

**Left

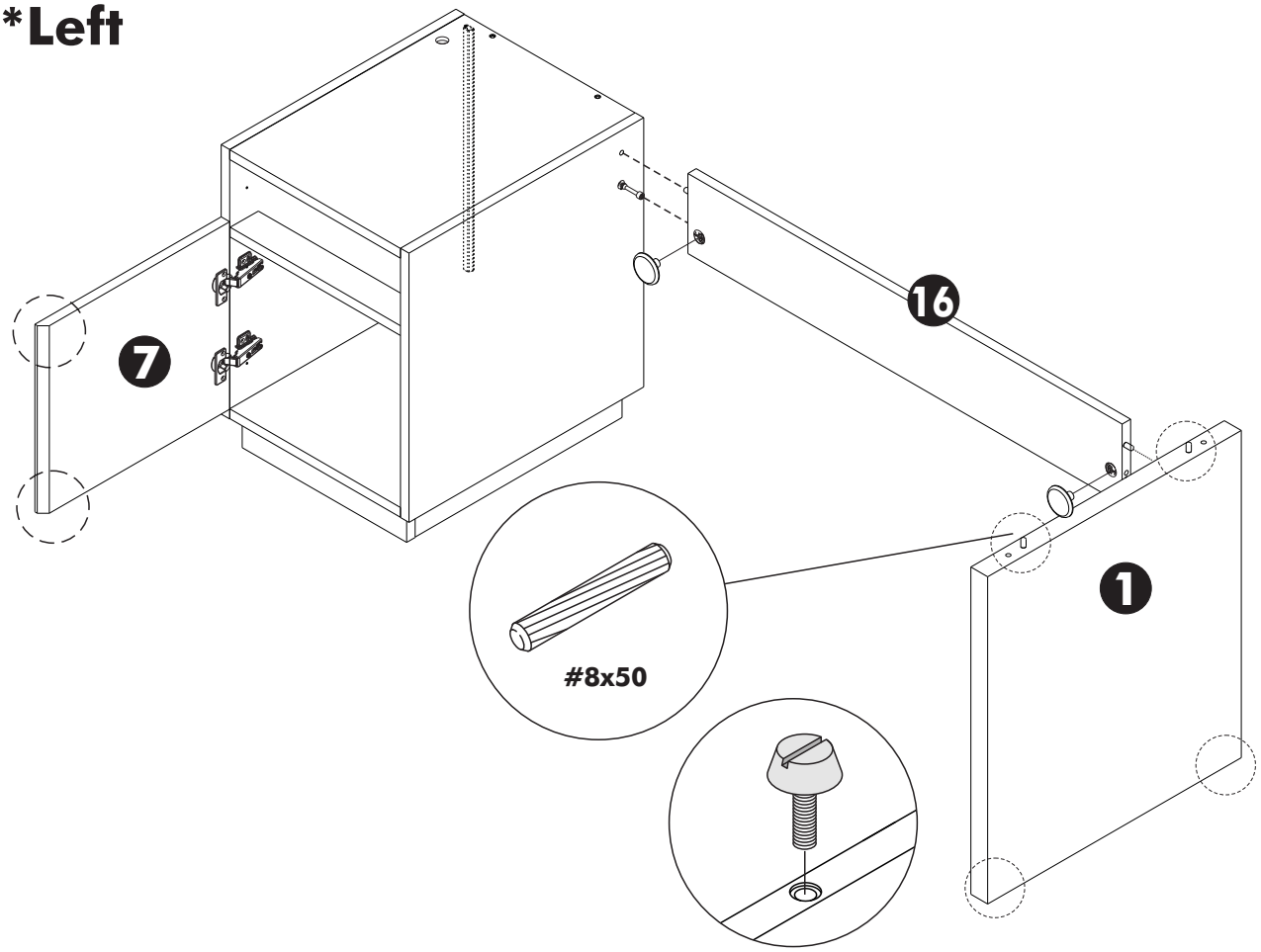

6.

**Left

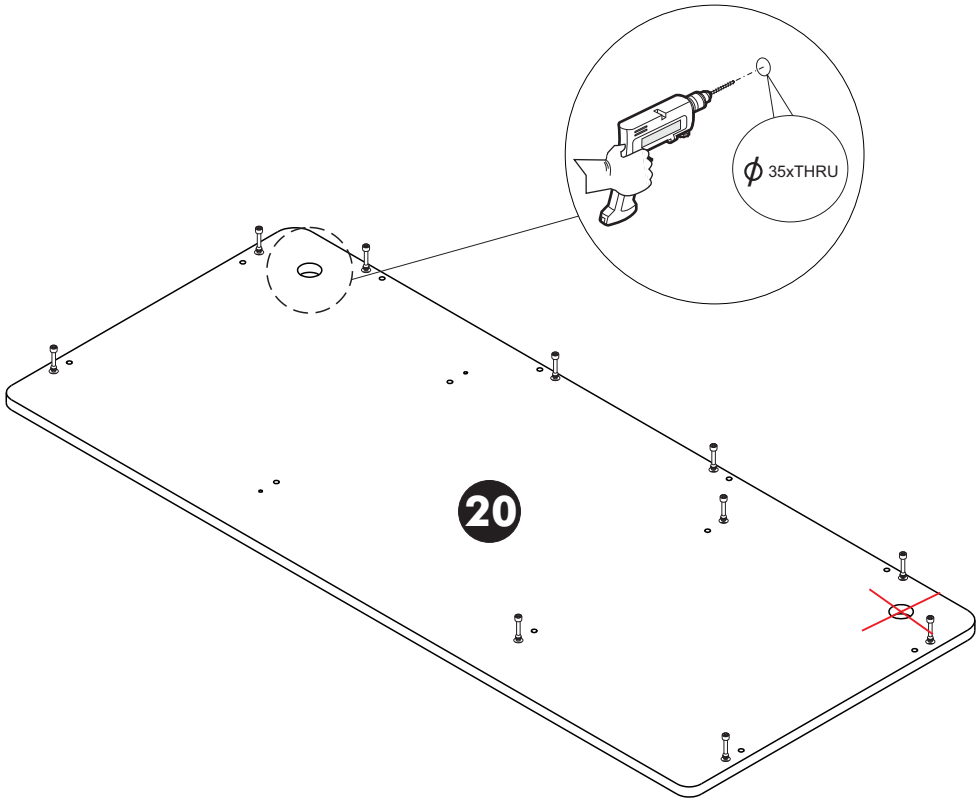

7.

**Left

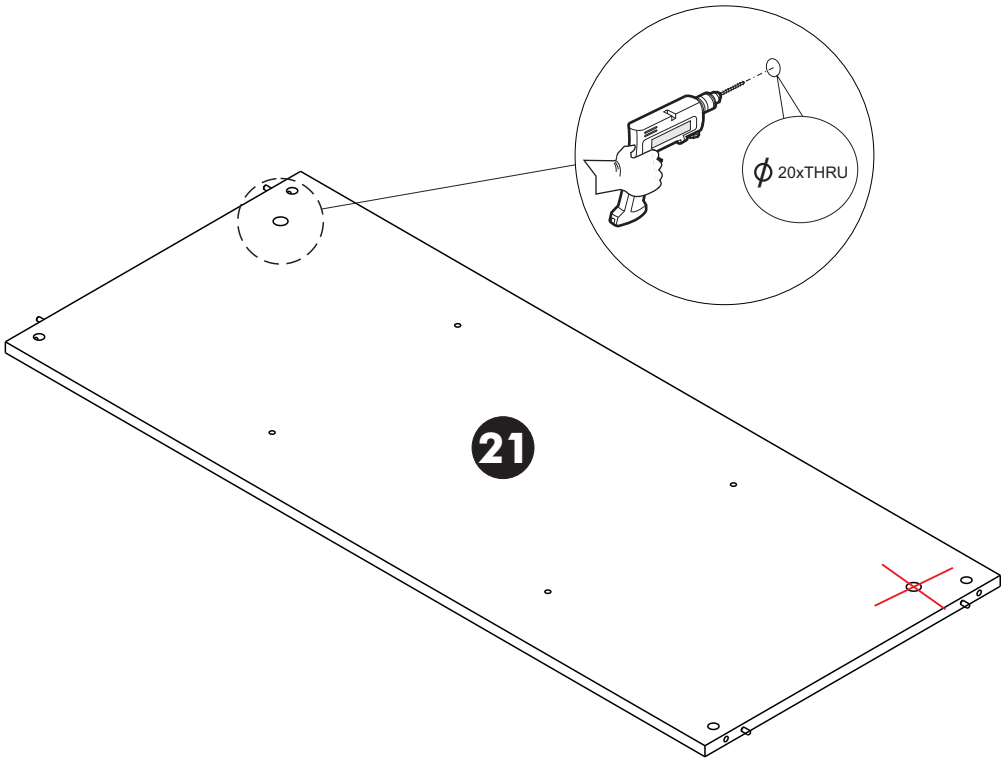

8.

**Left

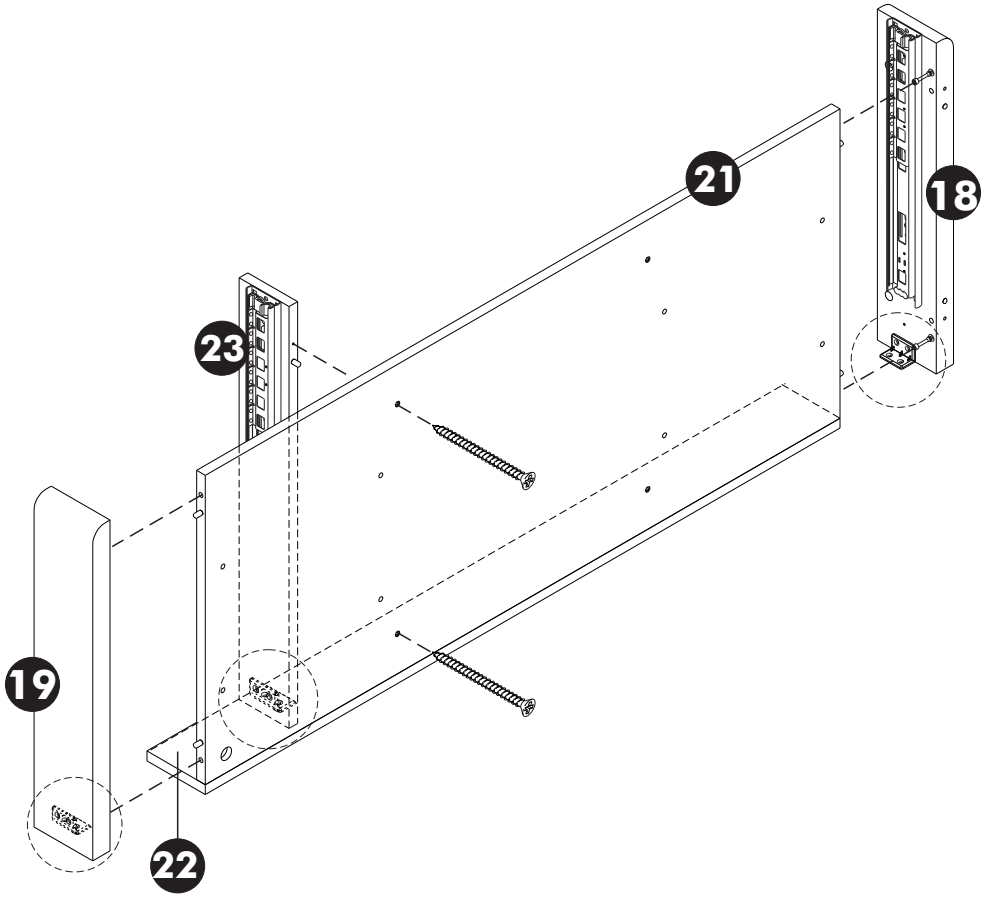

9.

**Left

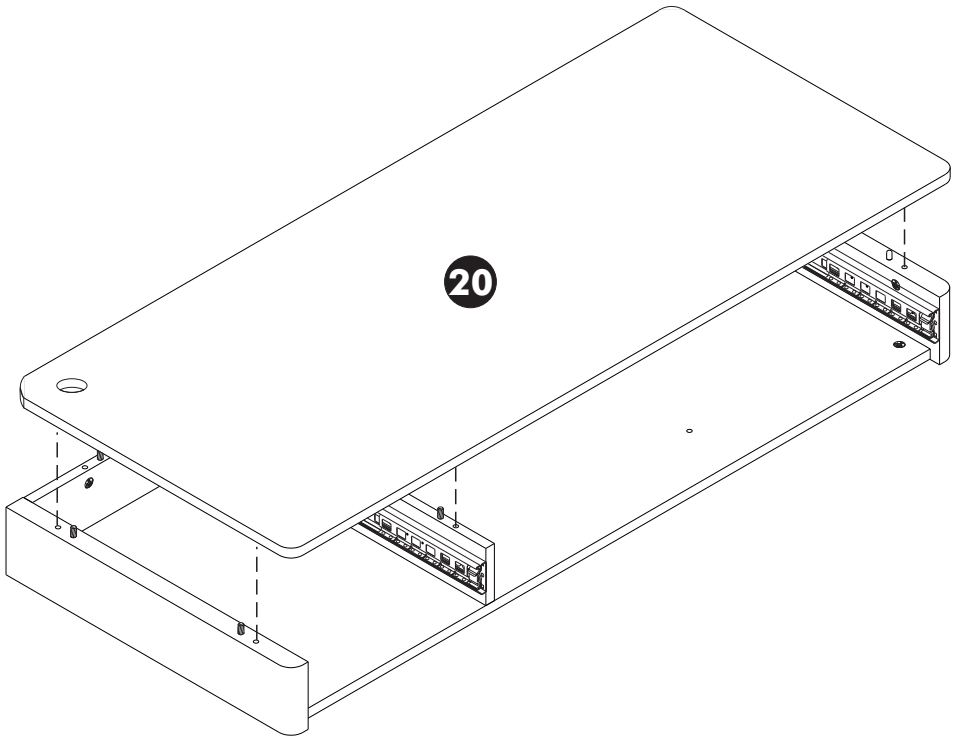

10.

**Left

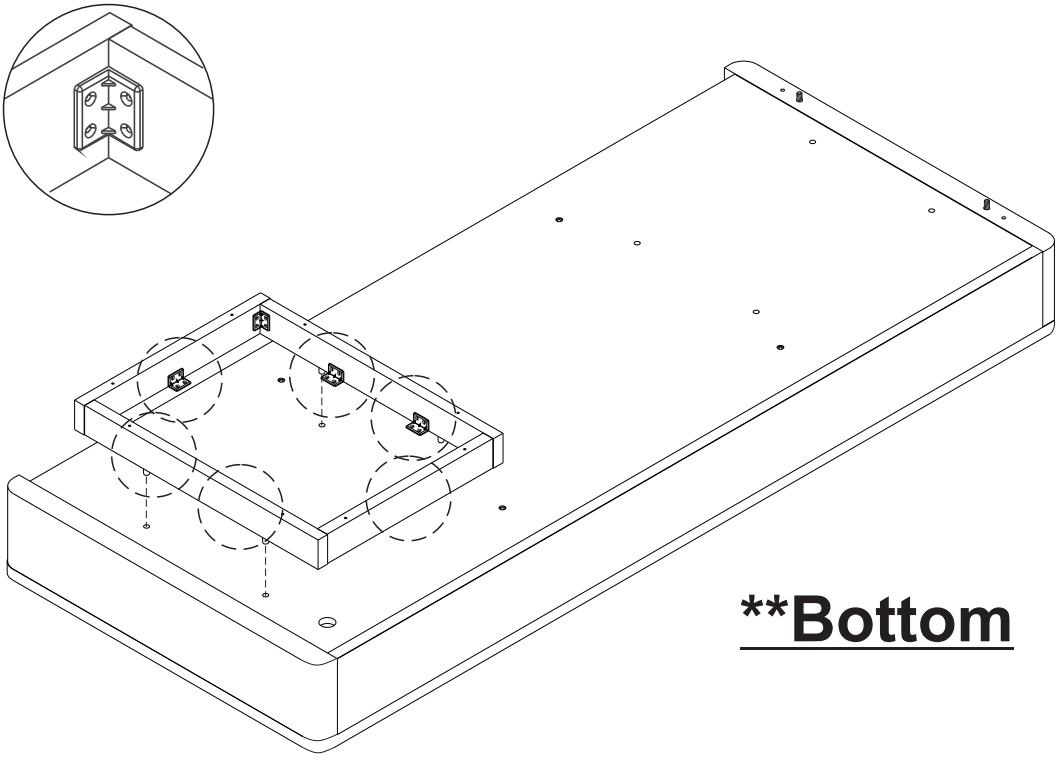

**Bottom

11.

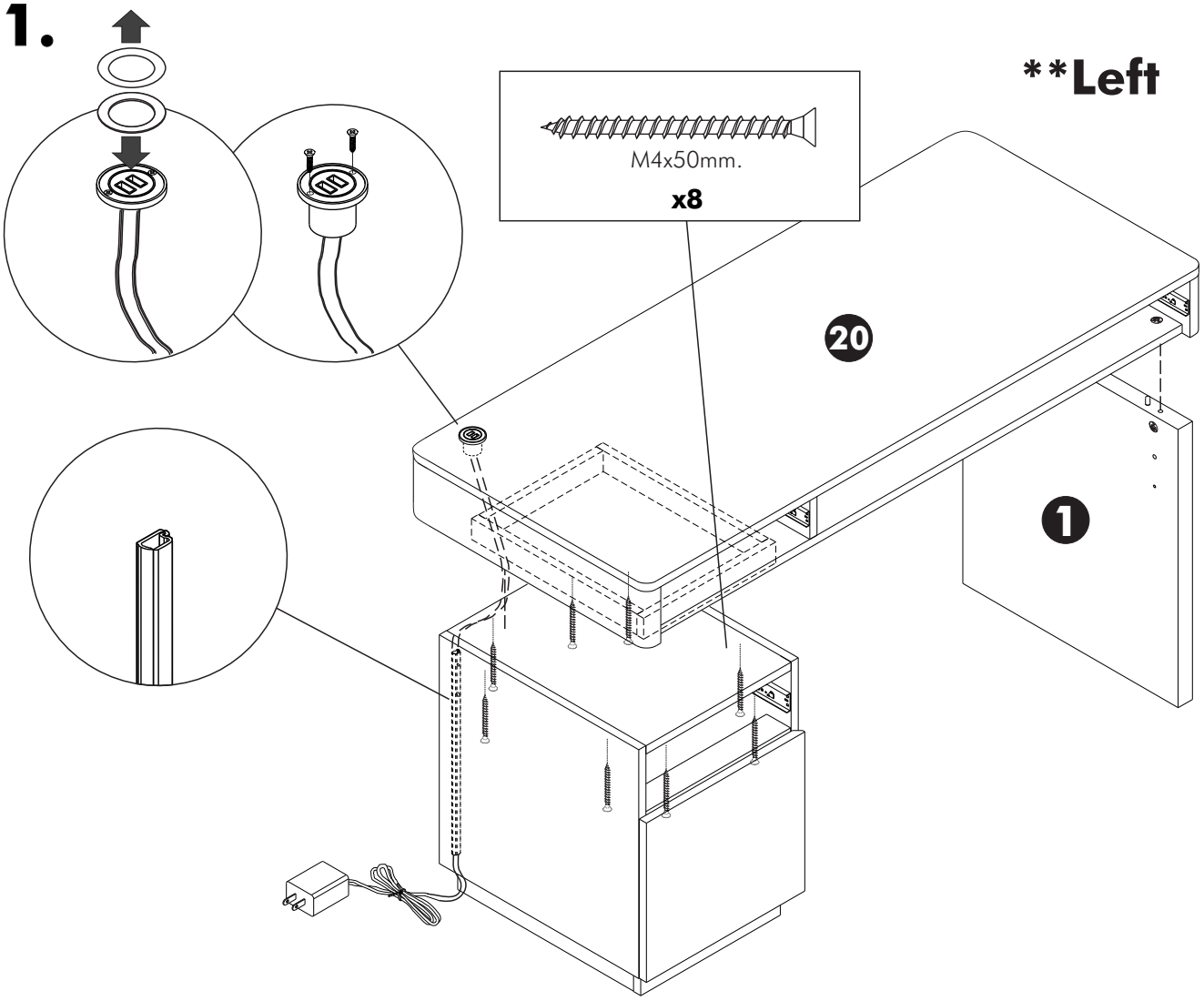

12.

****Left**

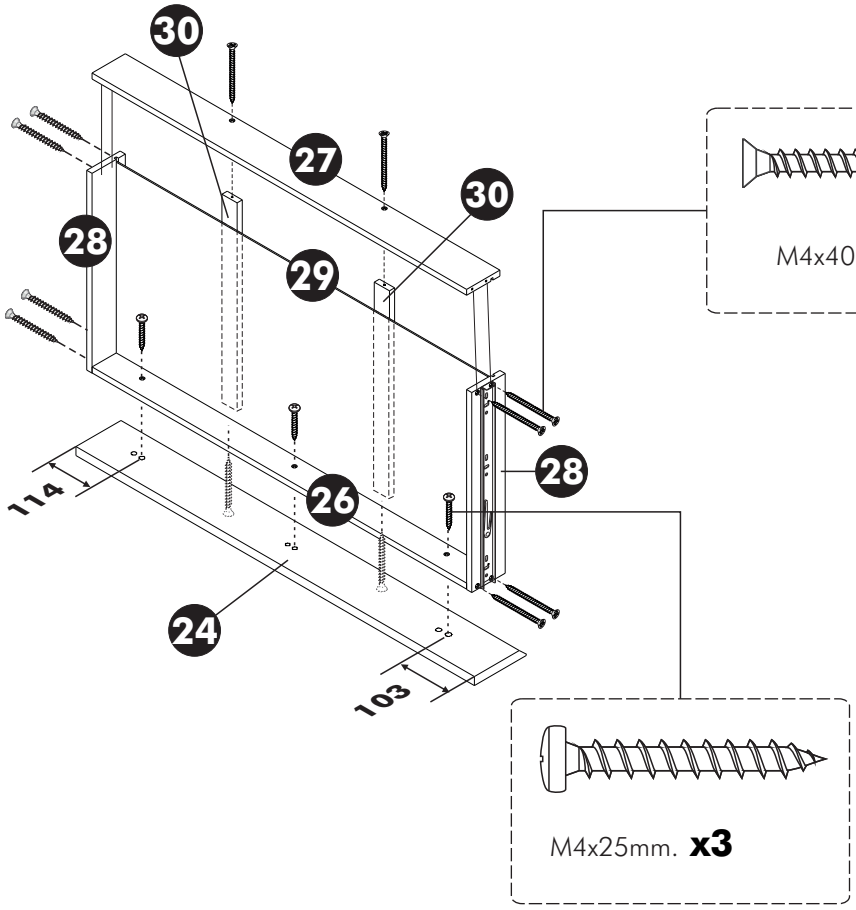

13.

****Left**

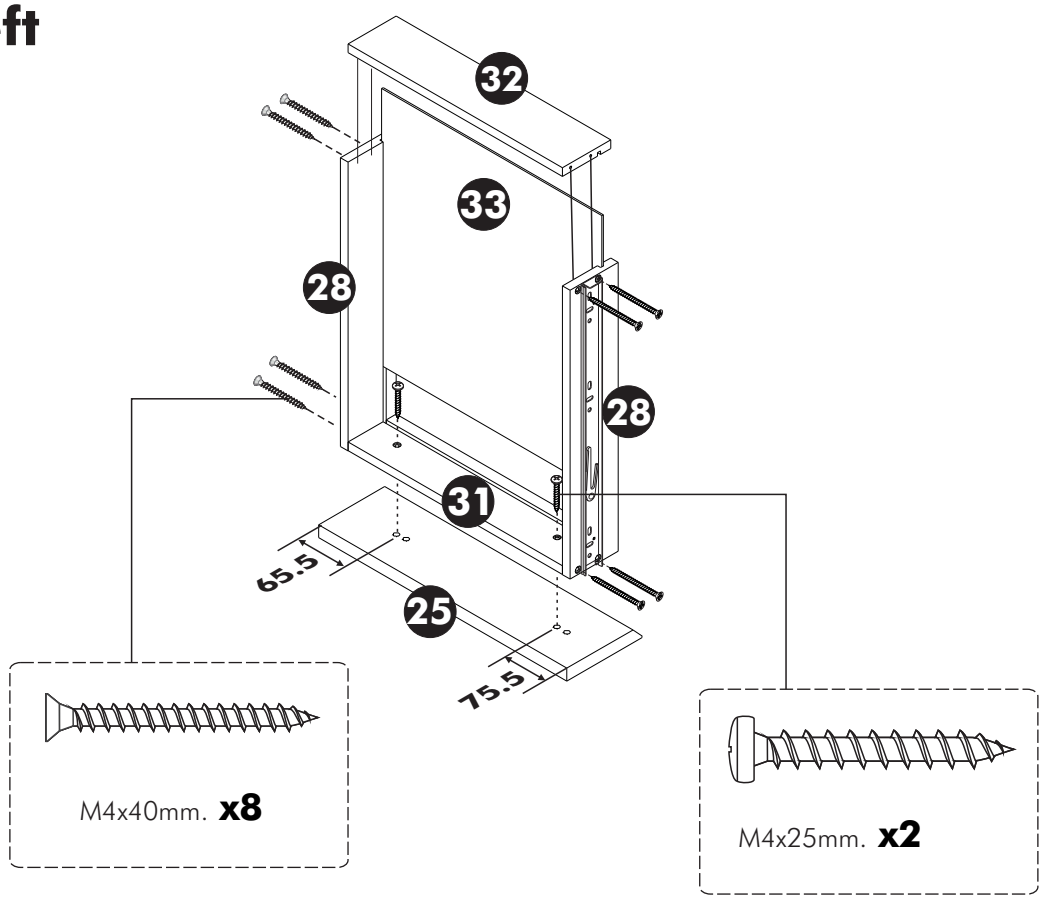

14.

**Left

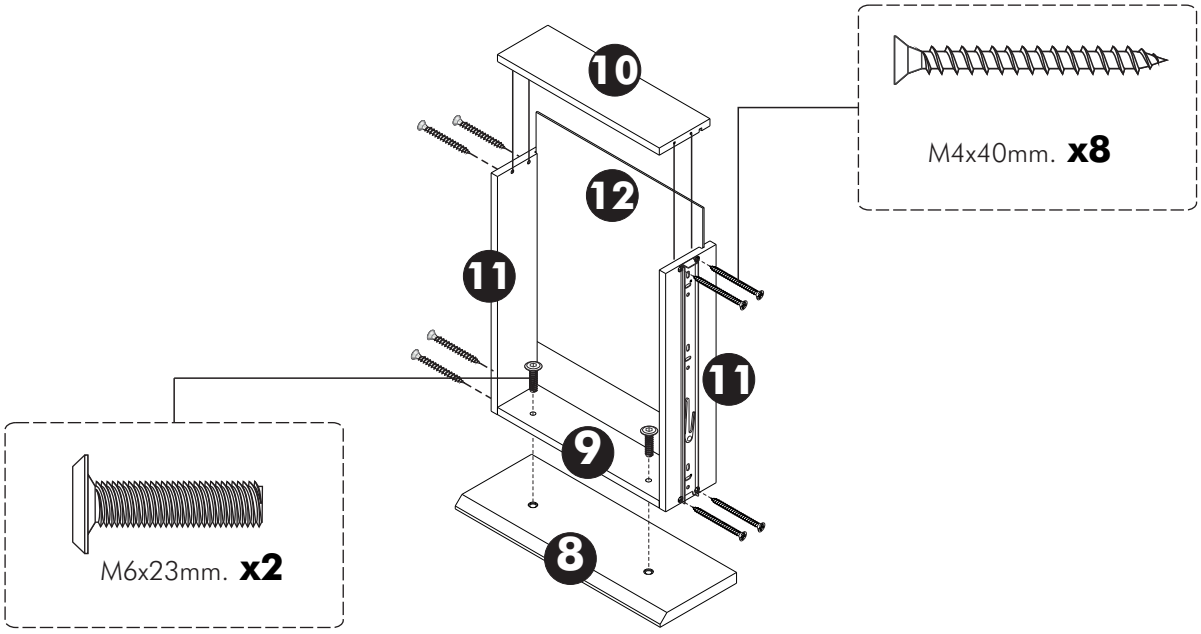

15.

**Left

