CHAMP

Champ G01 shelf 160 cm.

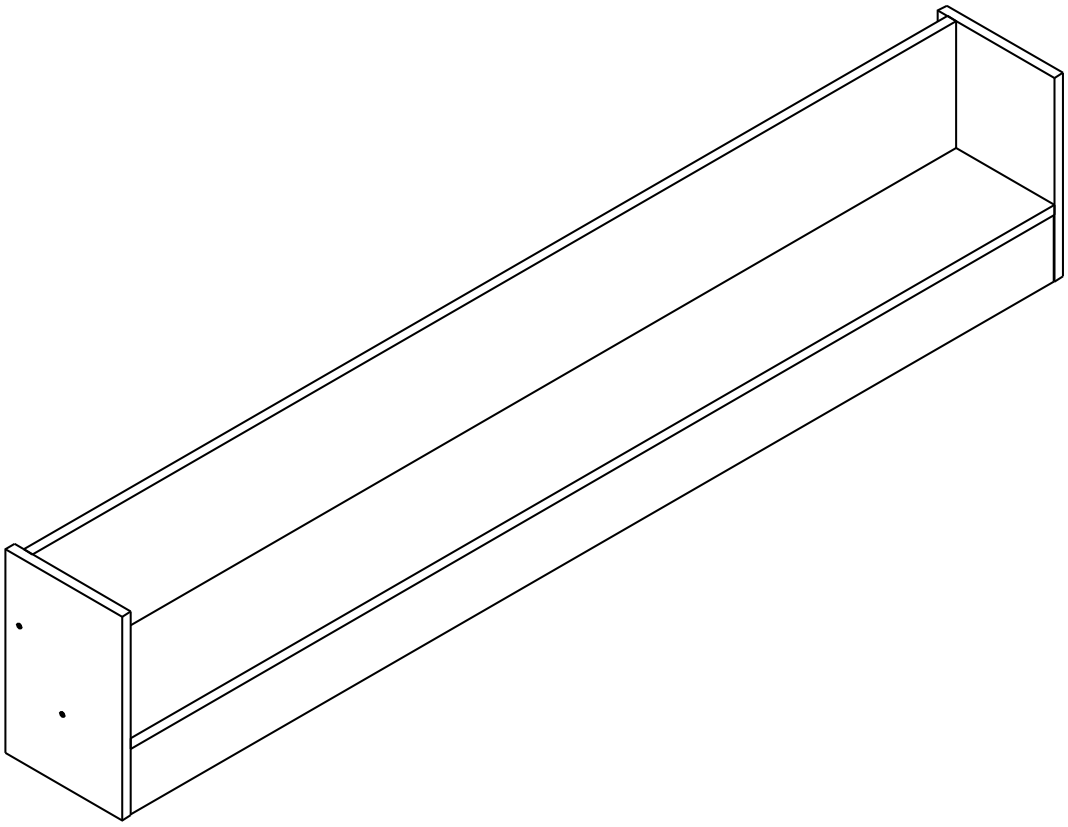

Indexlivingmall

CONNECT SYSTEM

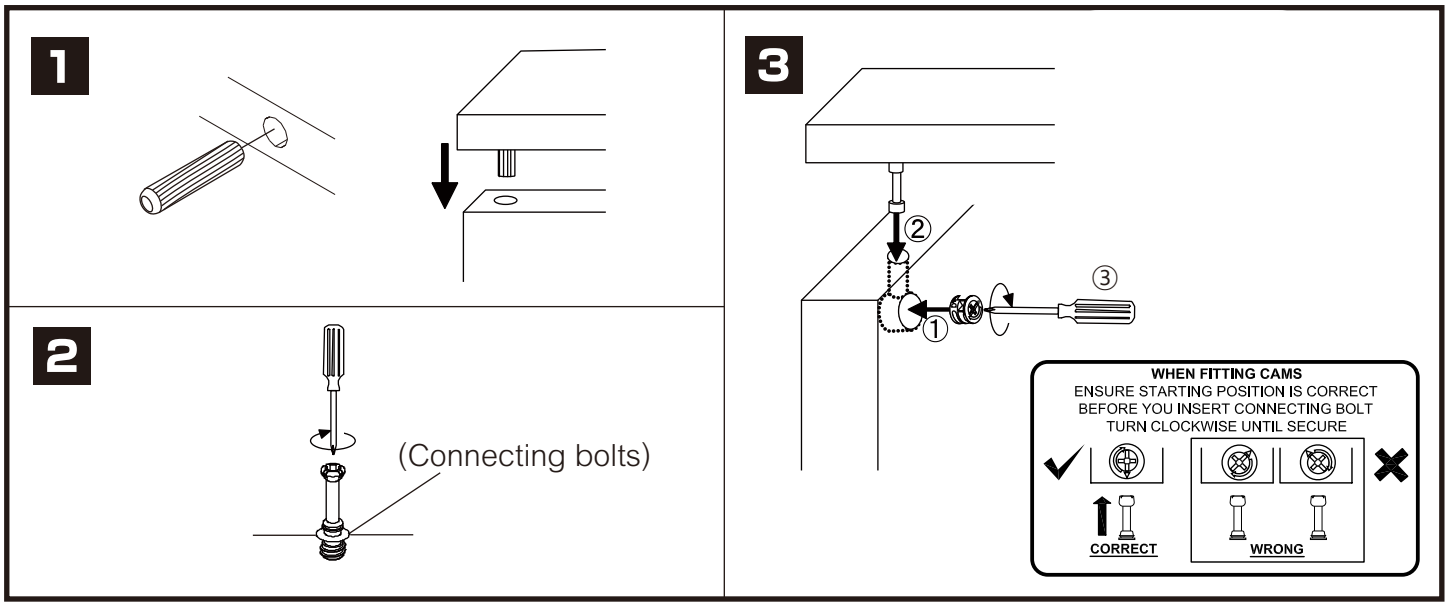

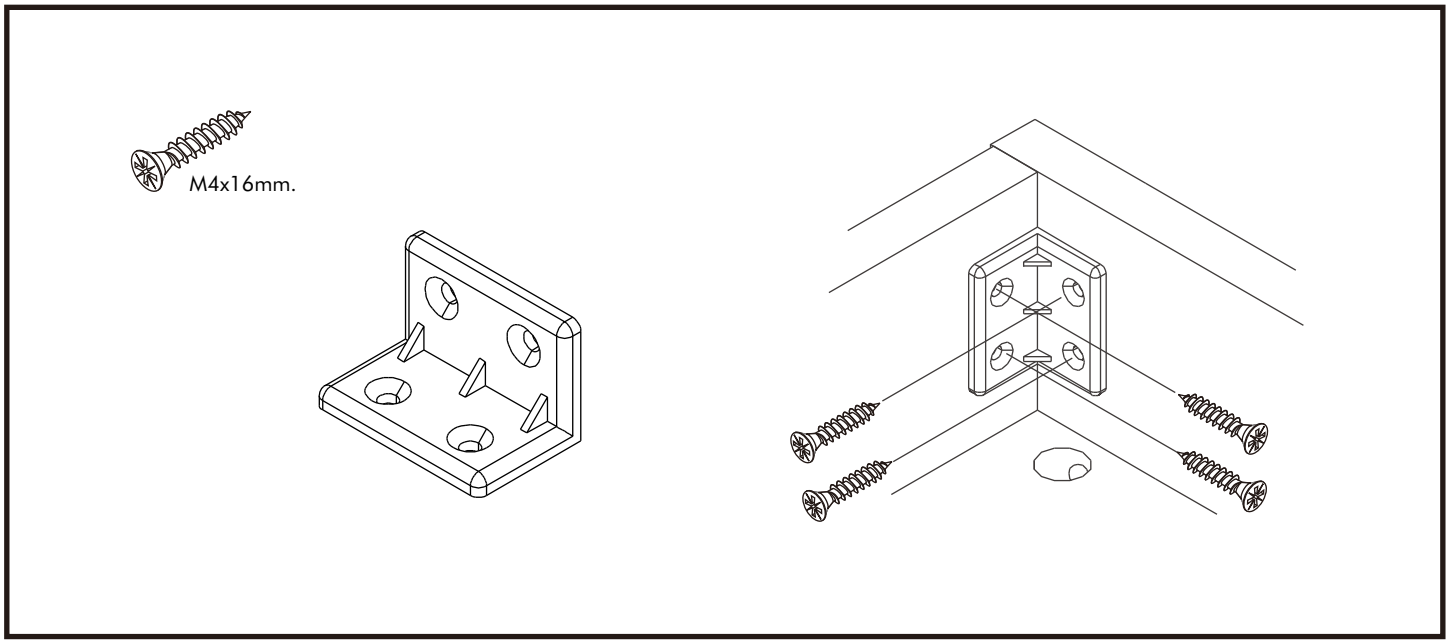

HARDWARE

-BODY SET

#8x35

x 8

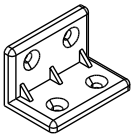

x 6

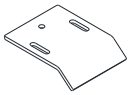

x 4

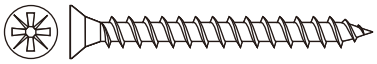

M4x50mm.

x 8

M4x16mm.

x 24

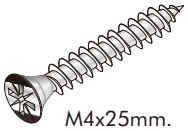

M4x25mm.

x 4

M4x16mm.

x 6

M5x50mm.

x 6

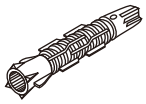

x 6

ASSEMBLY

-BODY SET

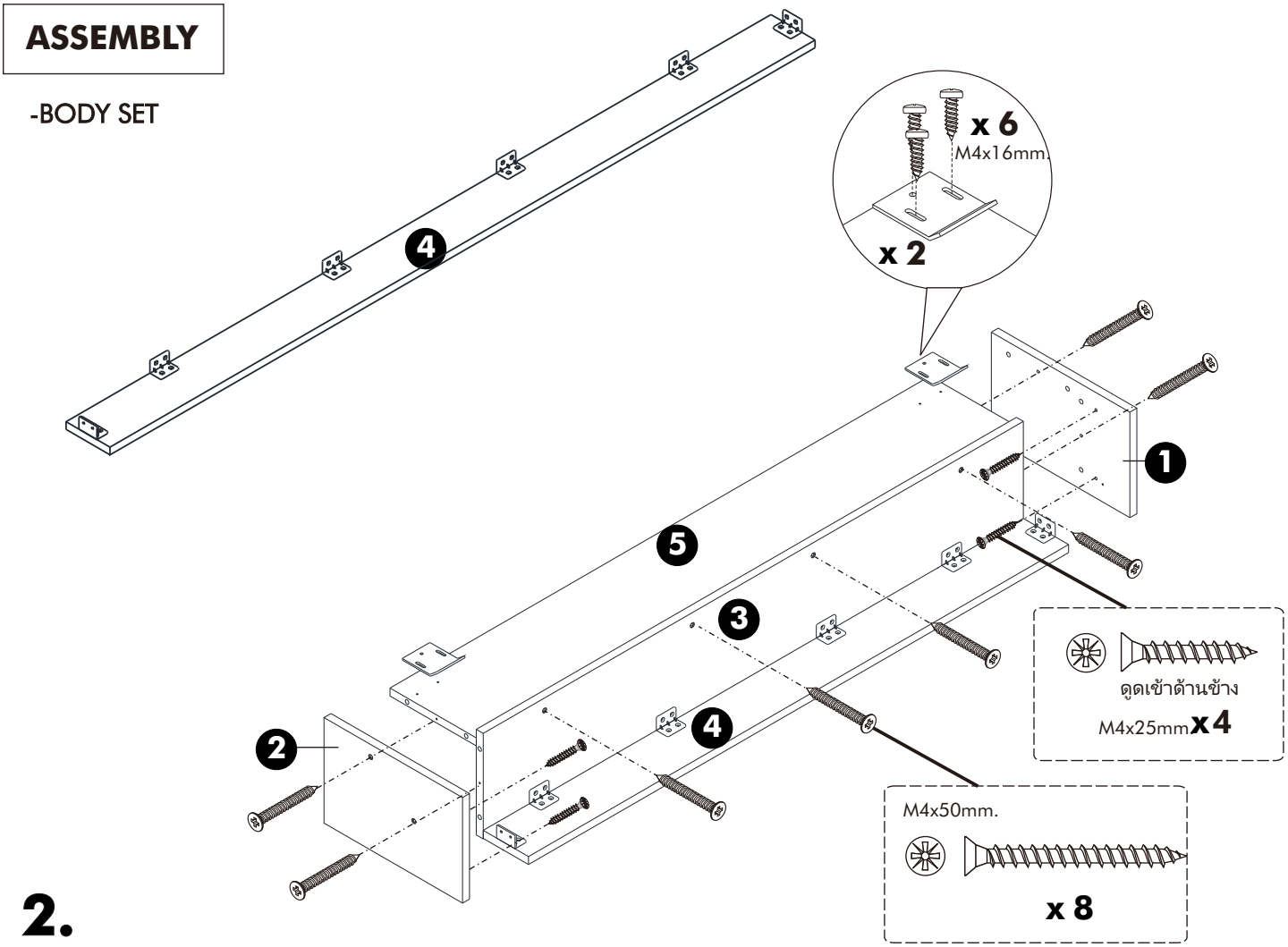
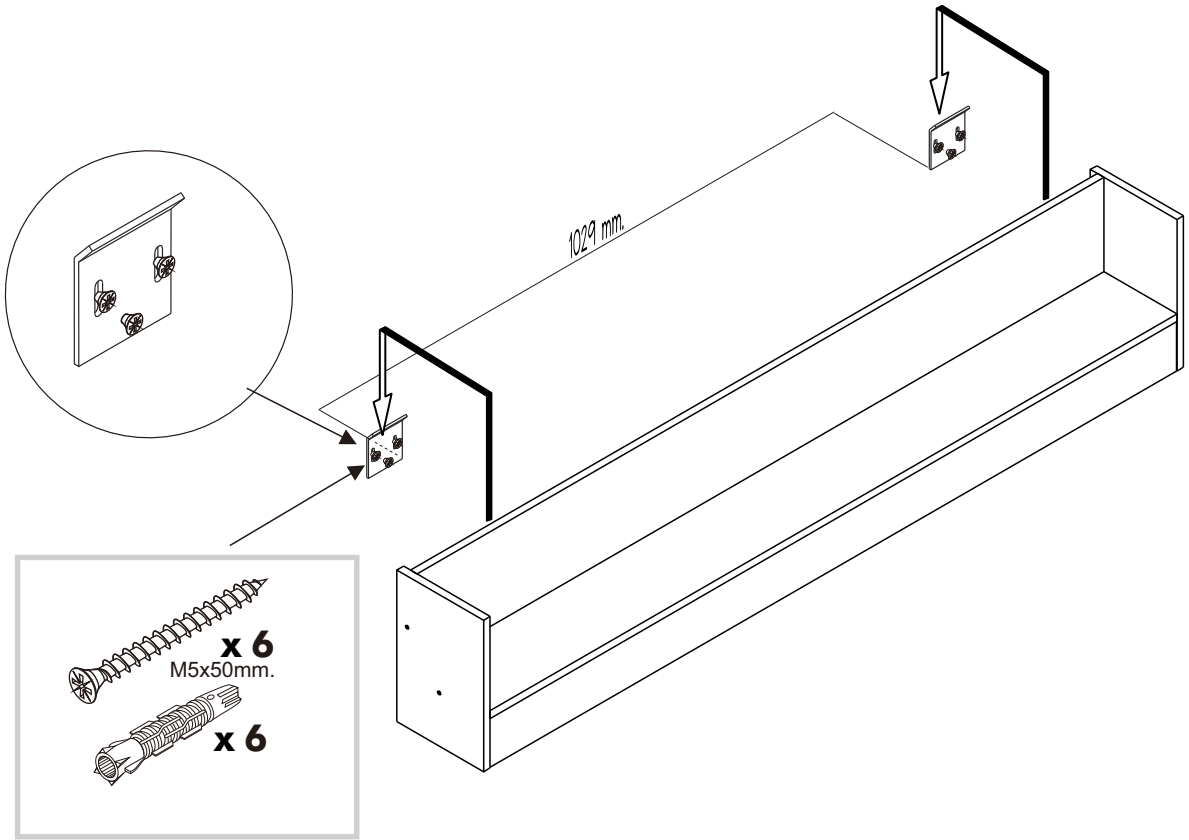
2.