CHAMP G01

BED 3.5 ft.

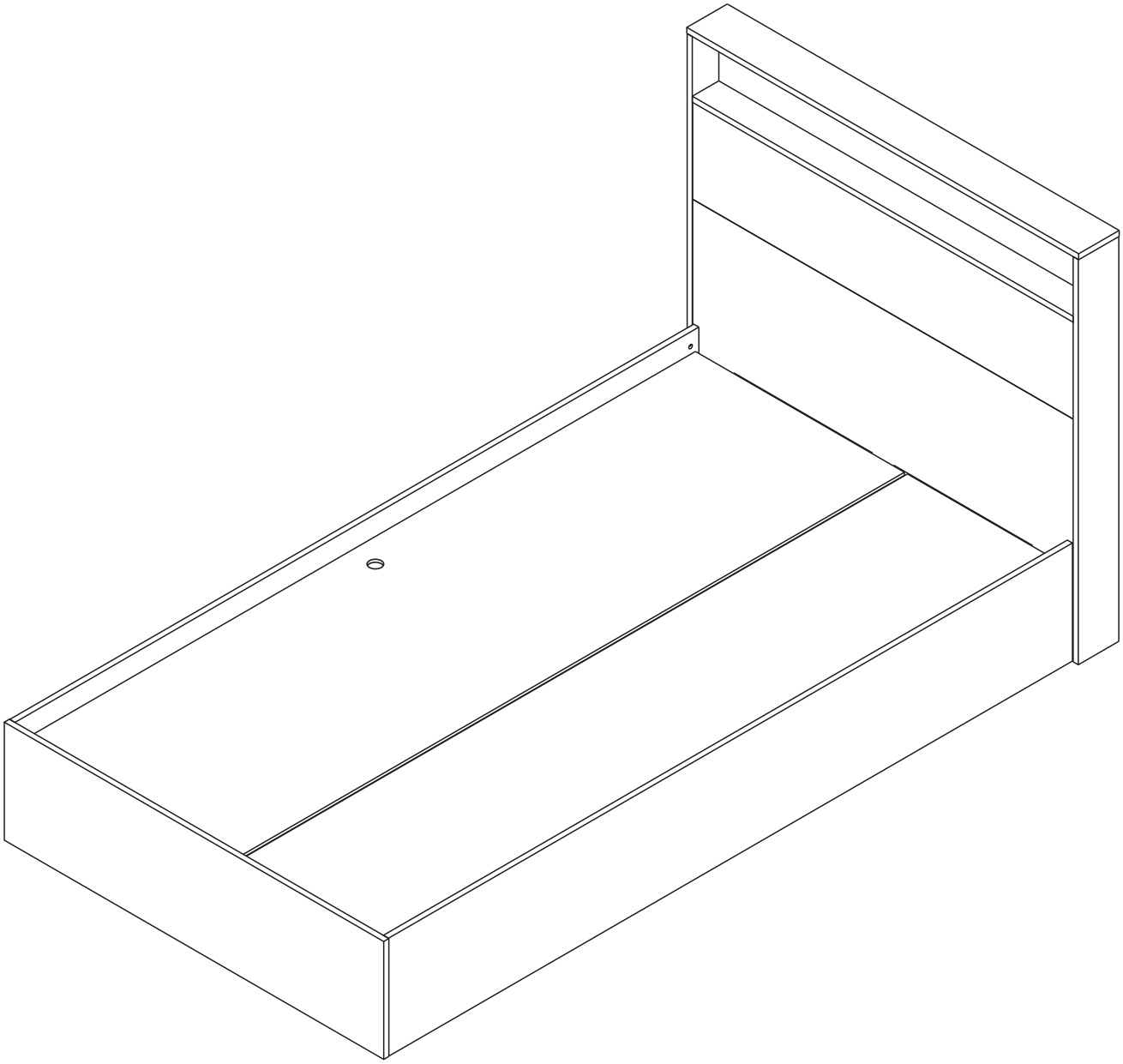

Indexlivingmall

CONNECT SYSTEM

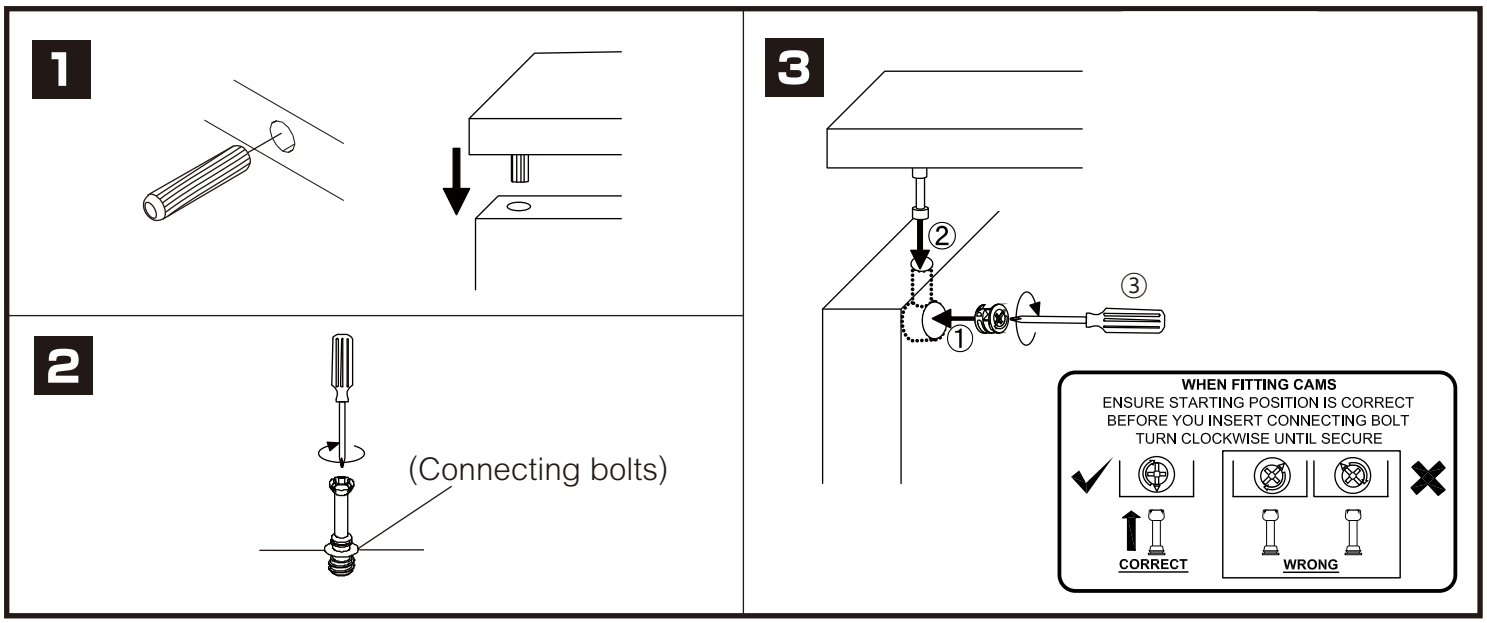

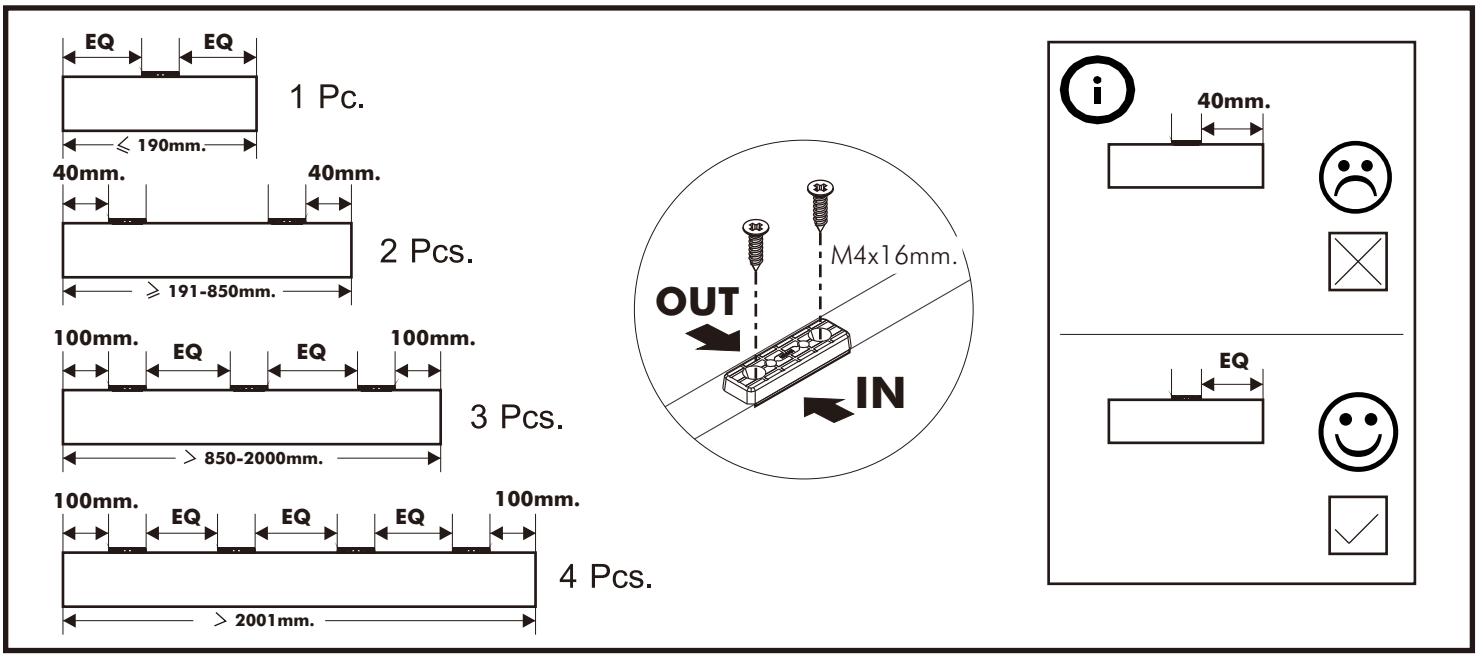

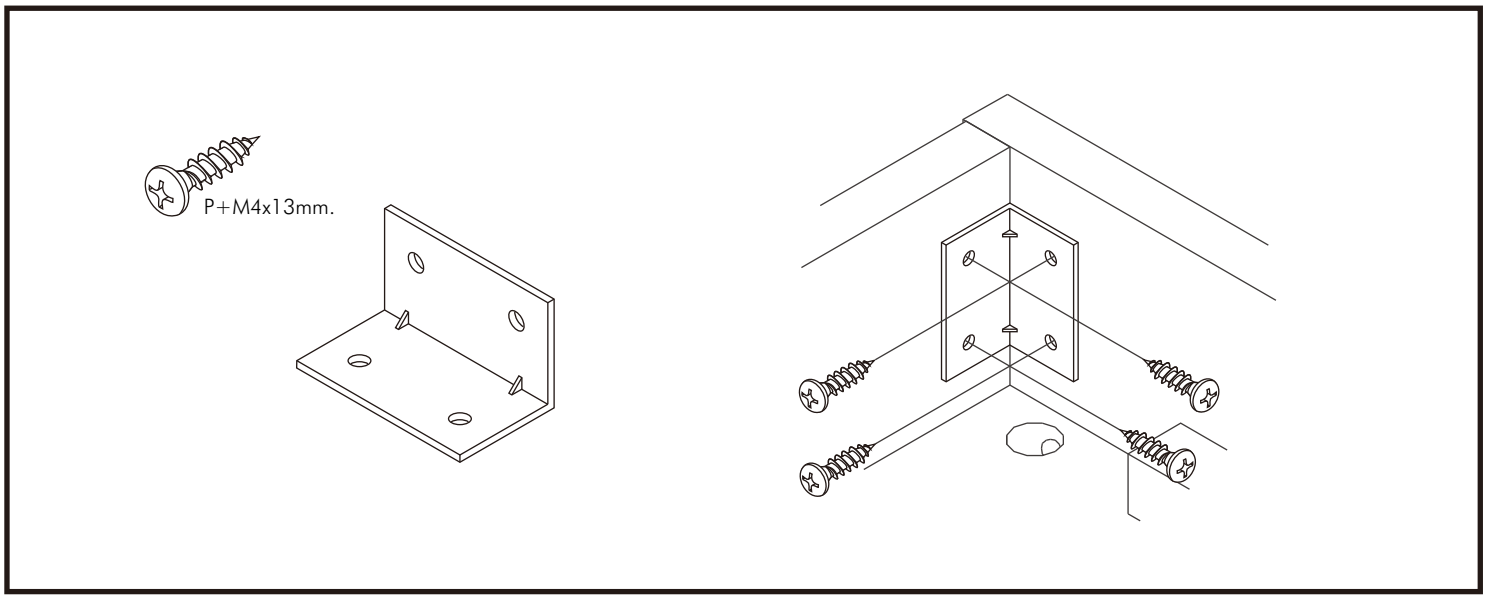

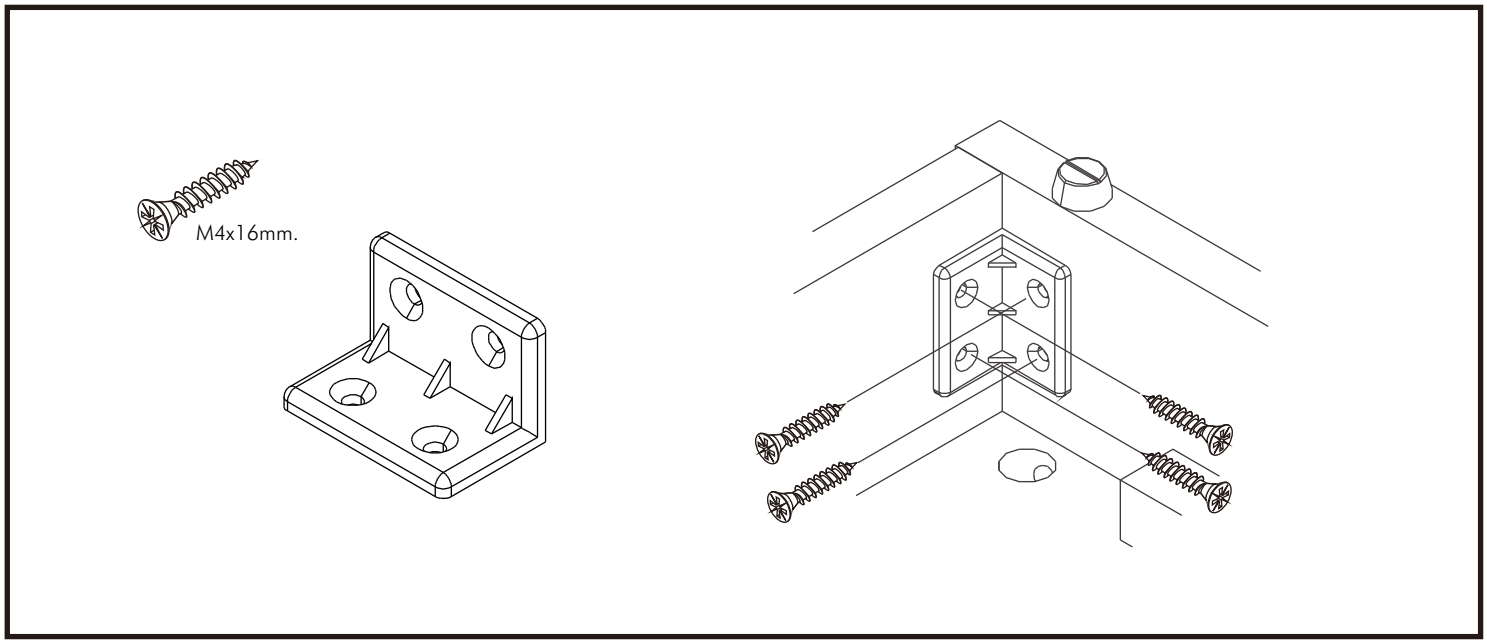
M4x16mm.

HARDWARE

-BODY SET

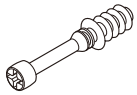

x 6

16mm.

x 6

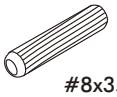

#8x35

x 30

M4x16mm.

x 128

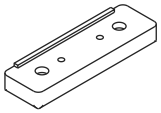

x 20

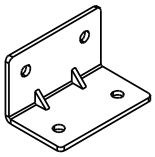

x 8

No.1

x 2

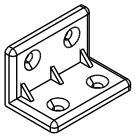

x 22

M4x16mm.

x 2

M4x30mm.

x 30

M4x13mm.

x 32

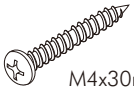

M4x30mm.

x 32

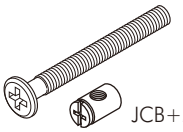

JCB+M6x60

x 4

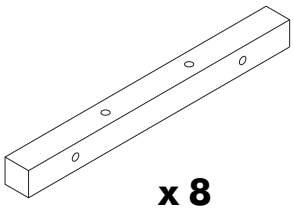

x 8

ASSEMBLY

-BODY SET

1.

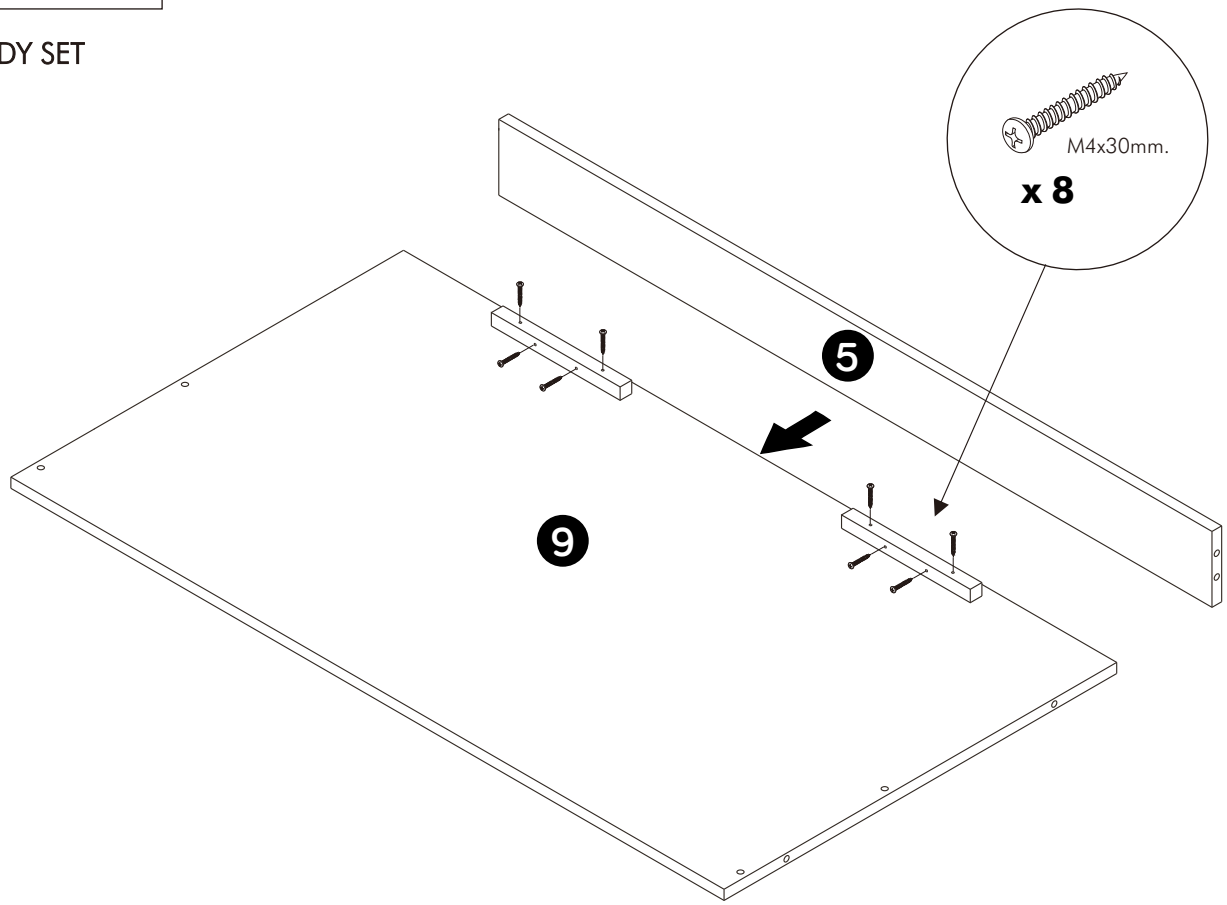

2.

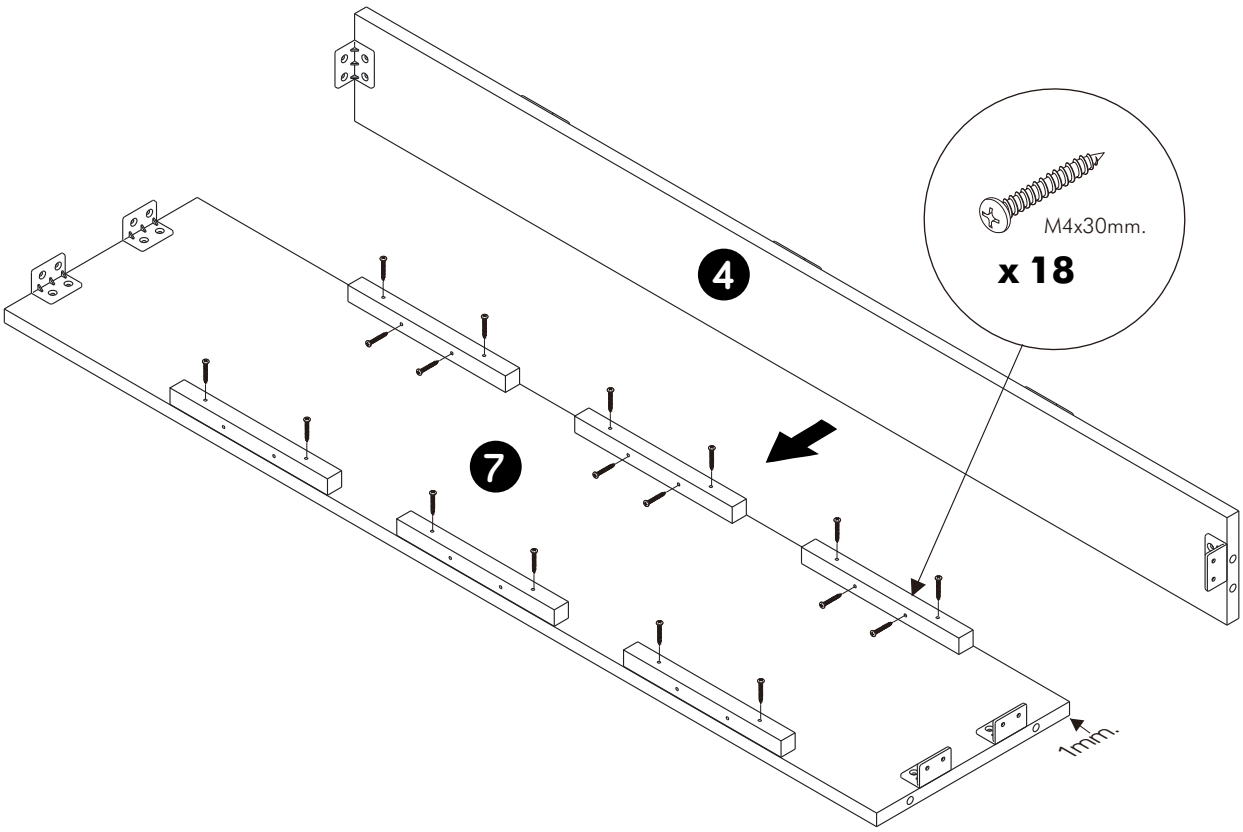

3.

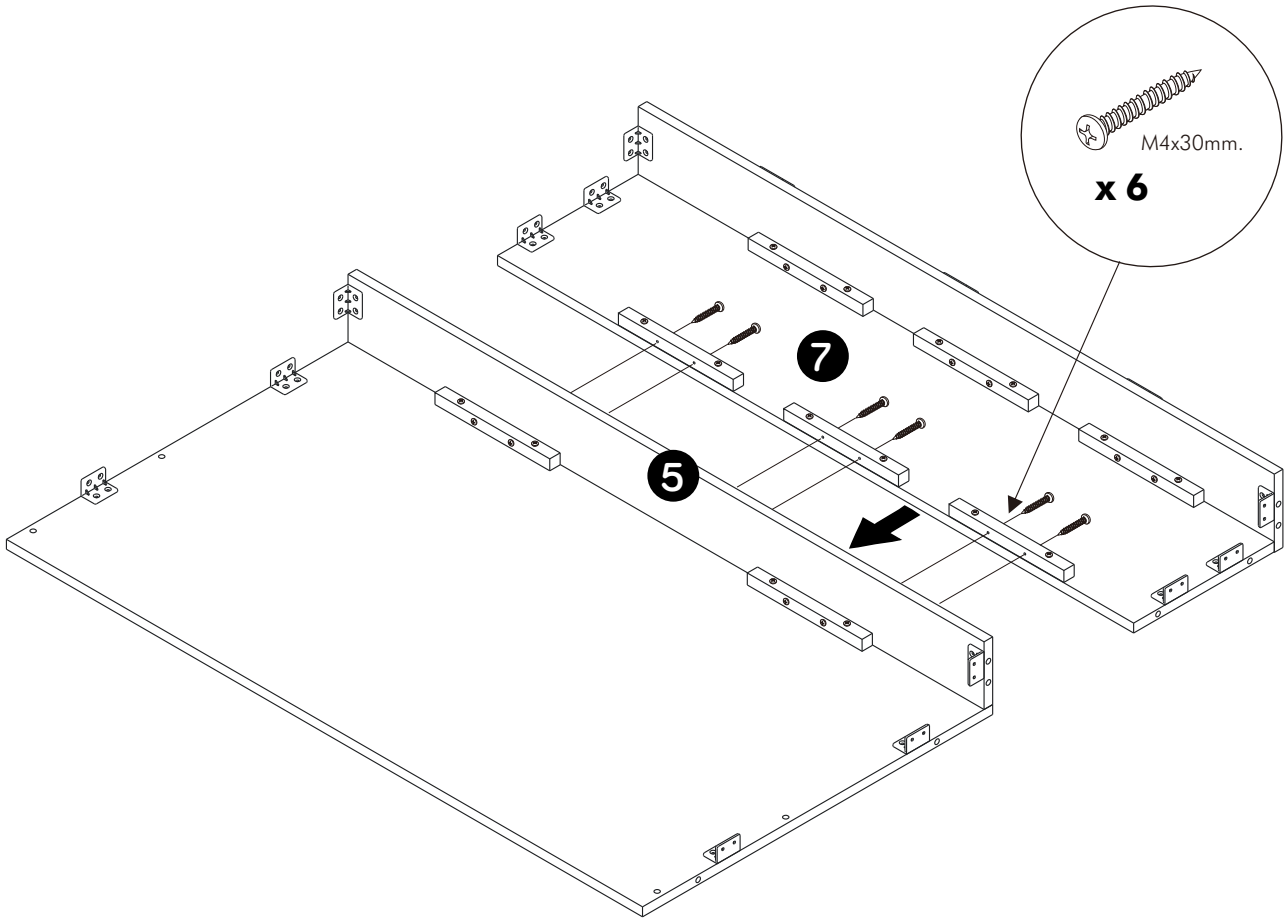

4.

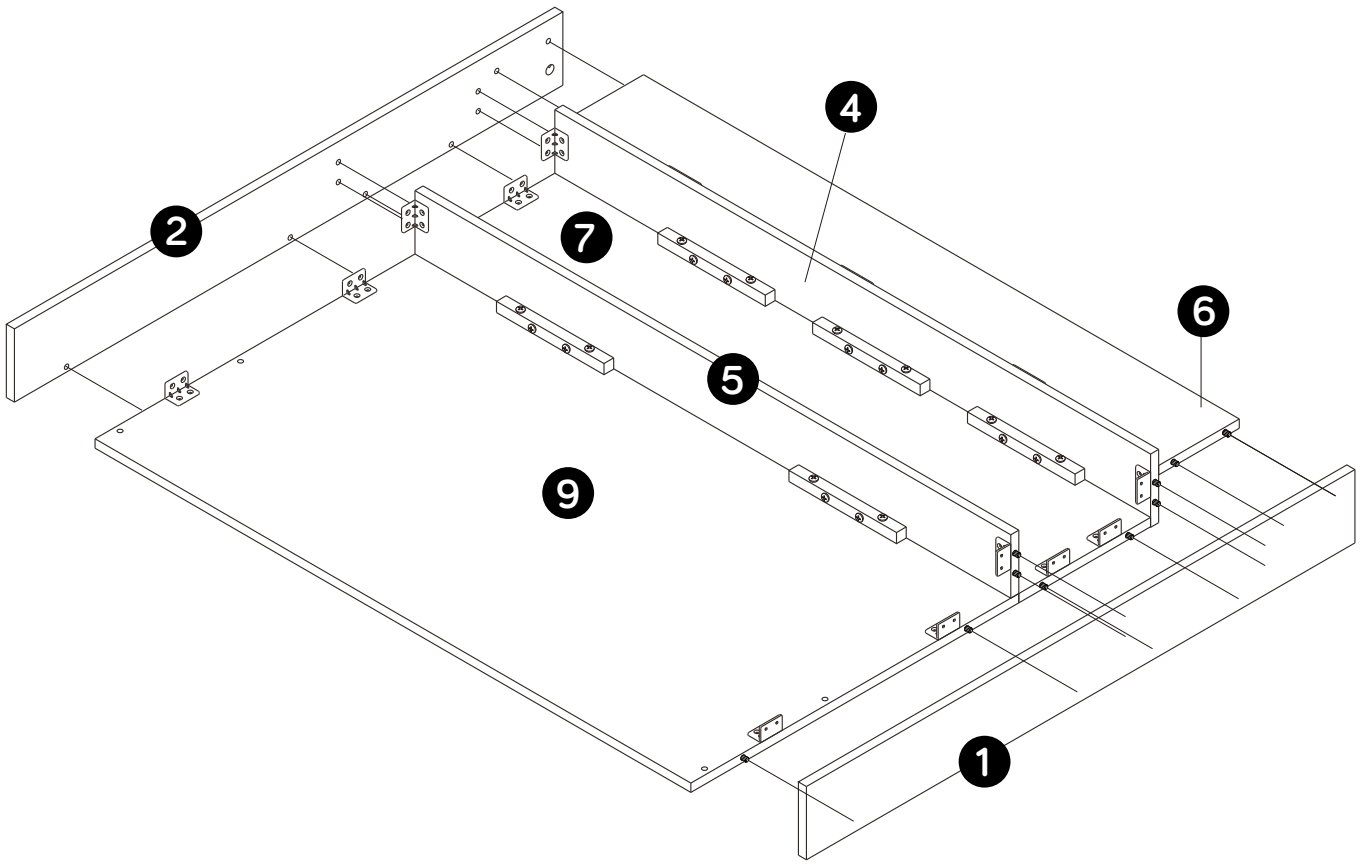

5.

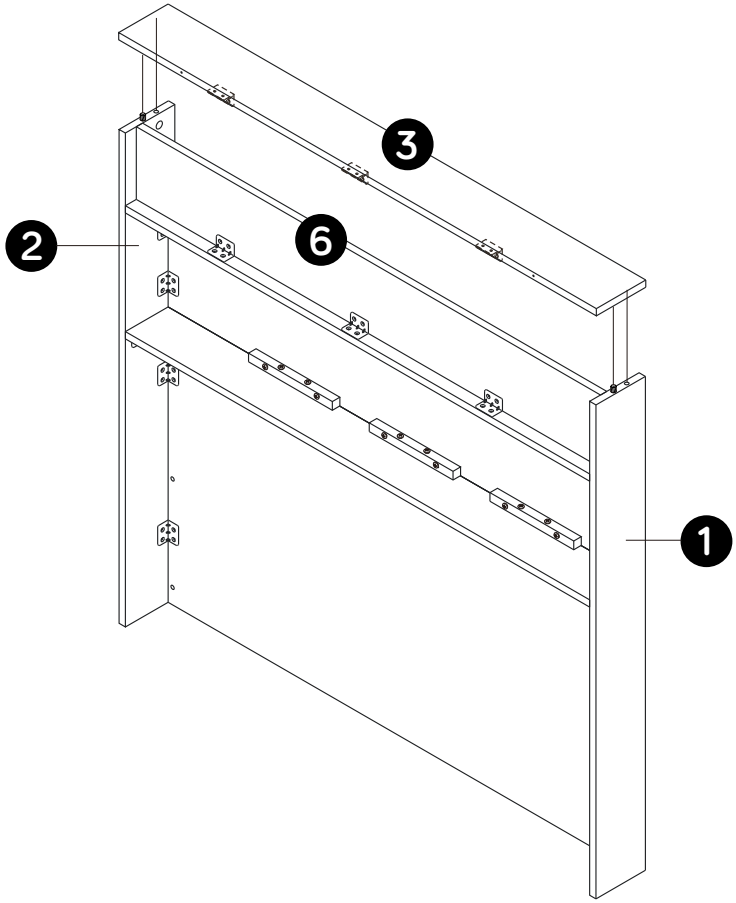

6.

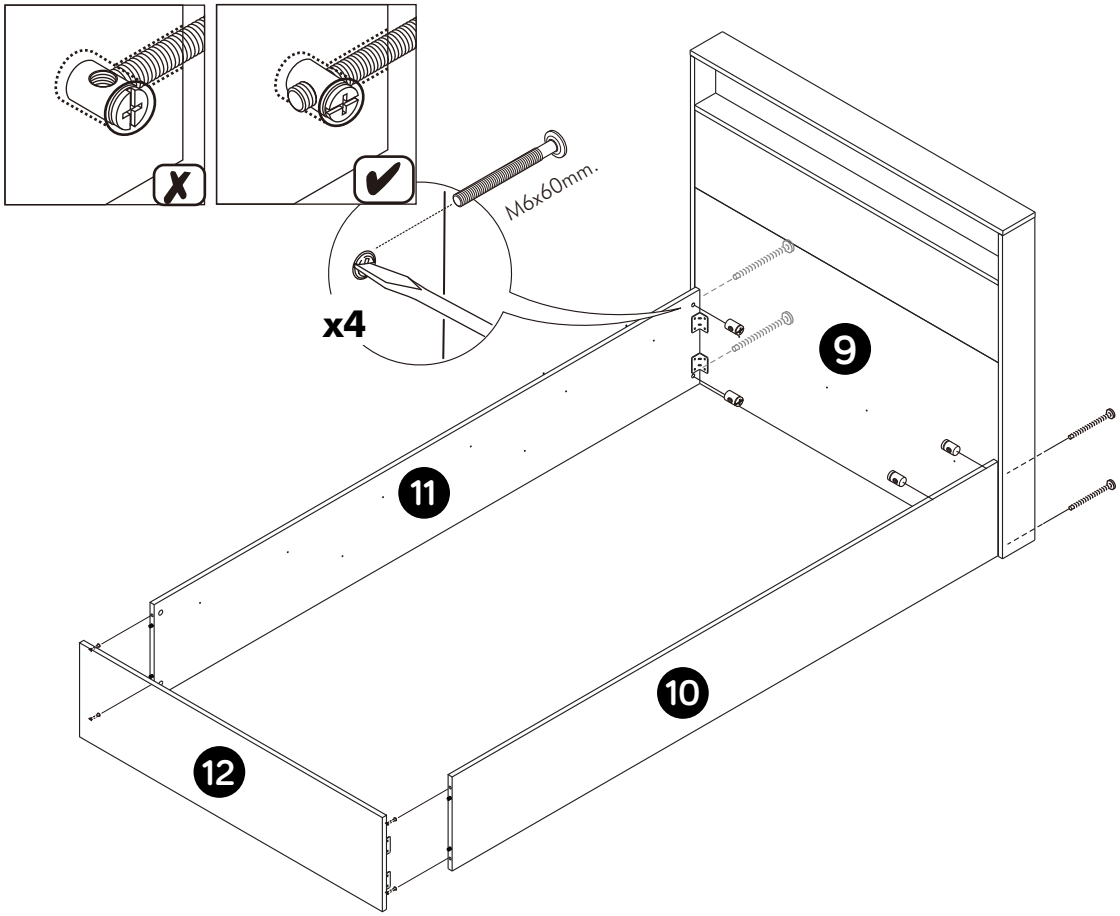

7.

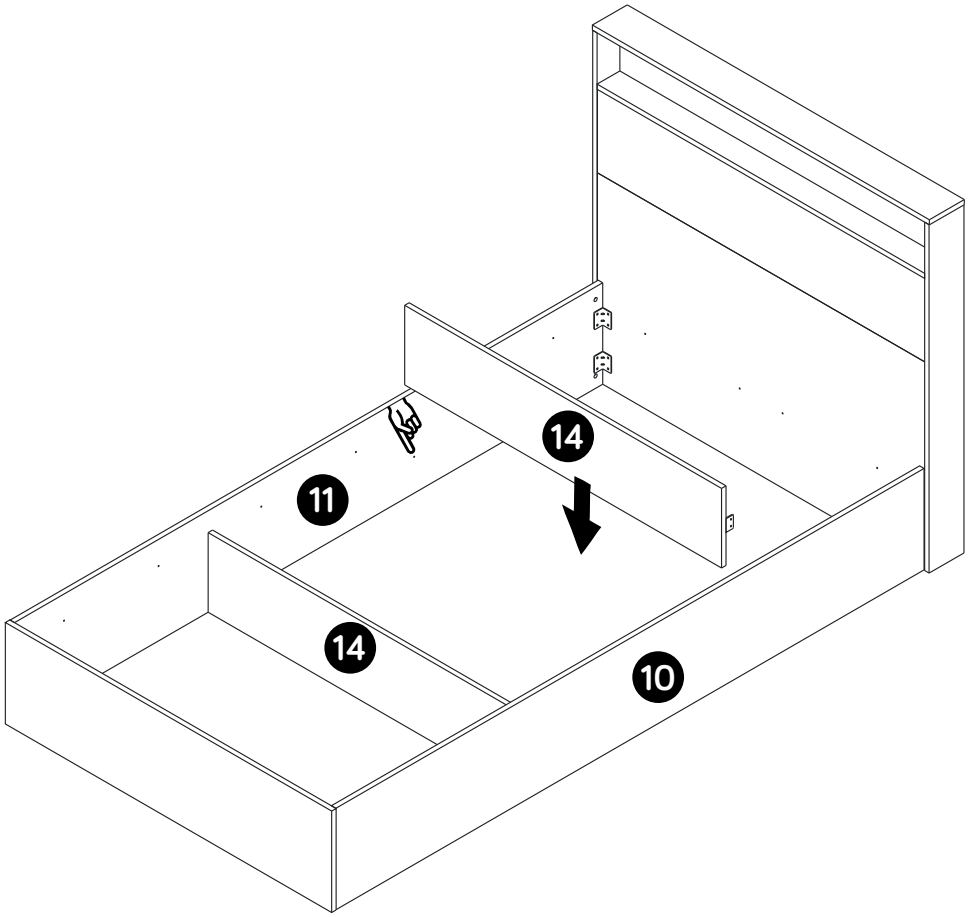

8.

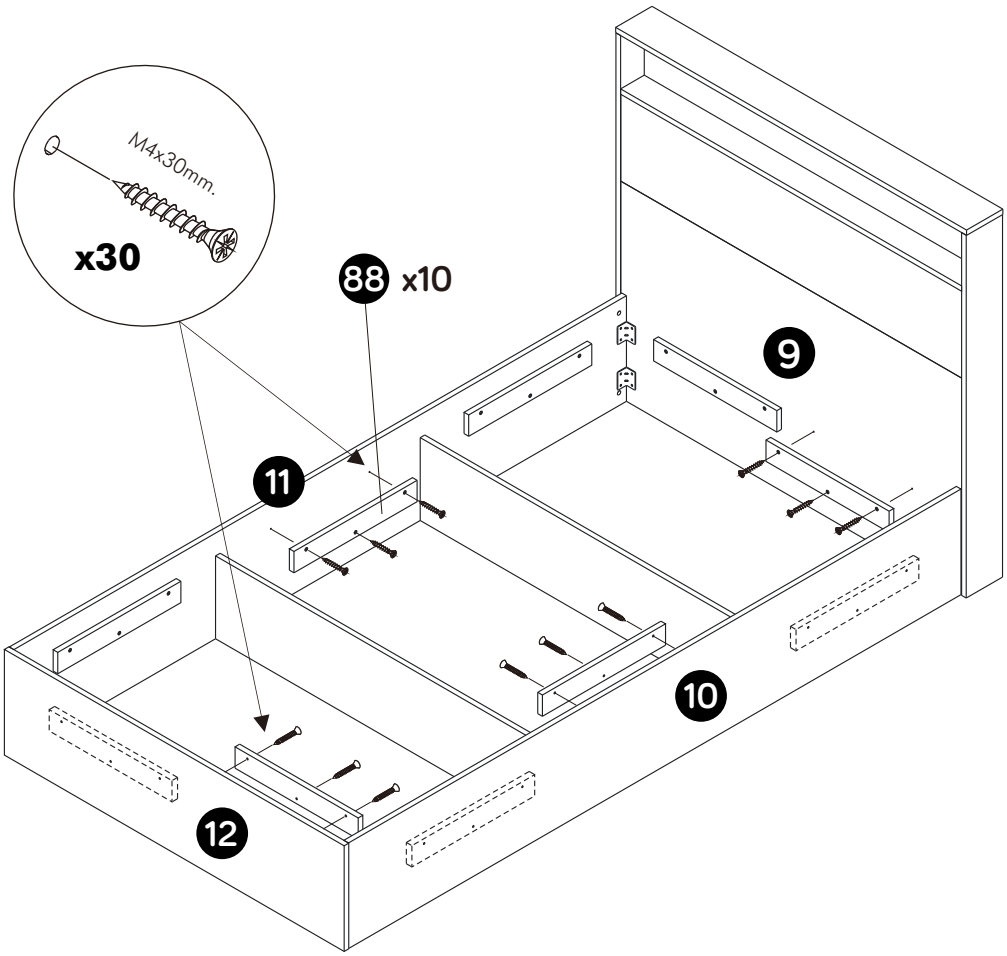

9.

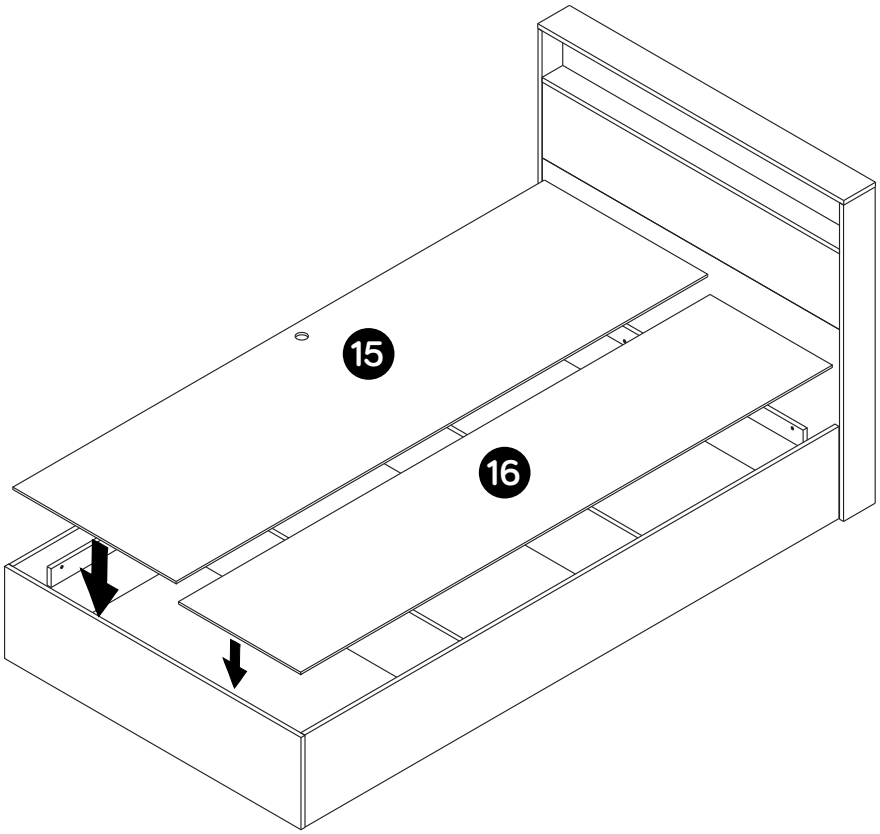

10.

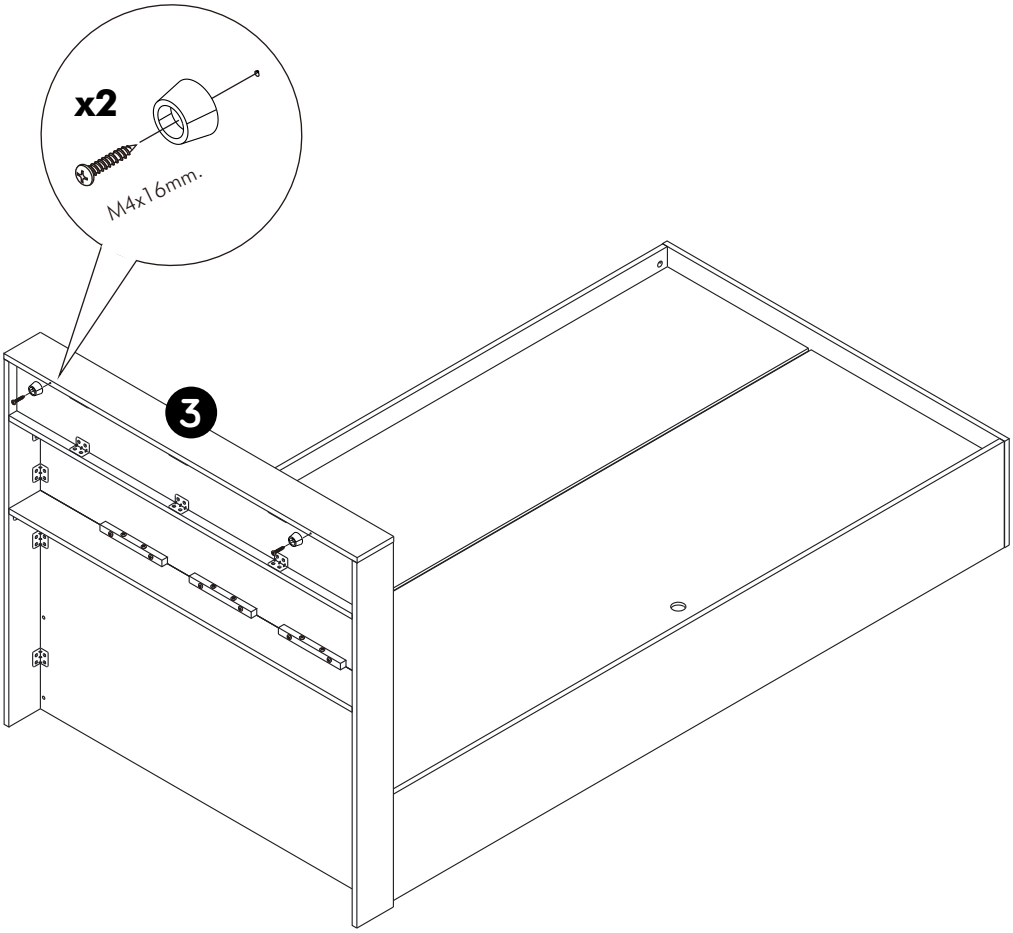

CHAMP G01

BED 3.5 ft.

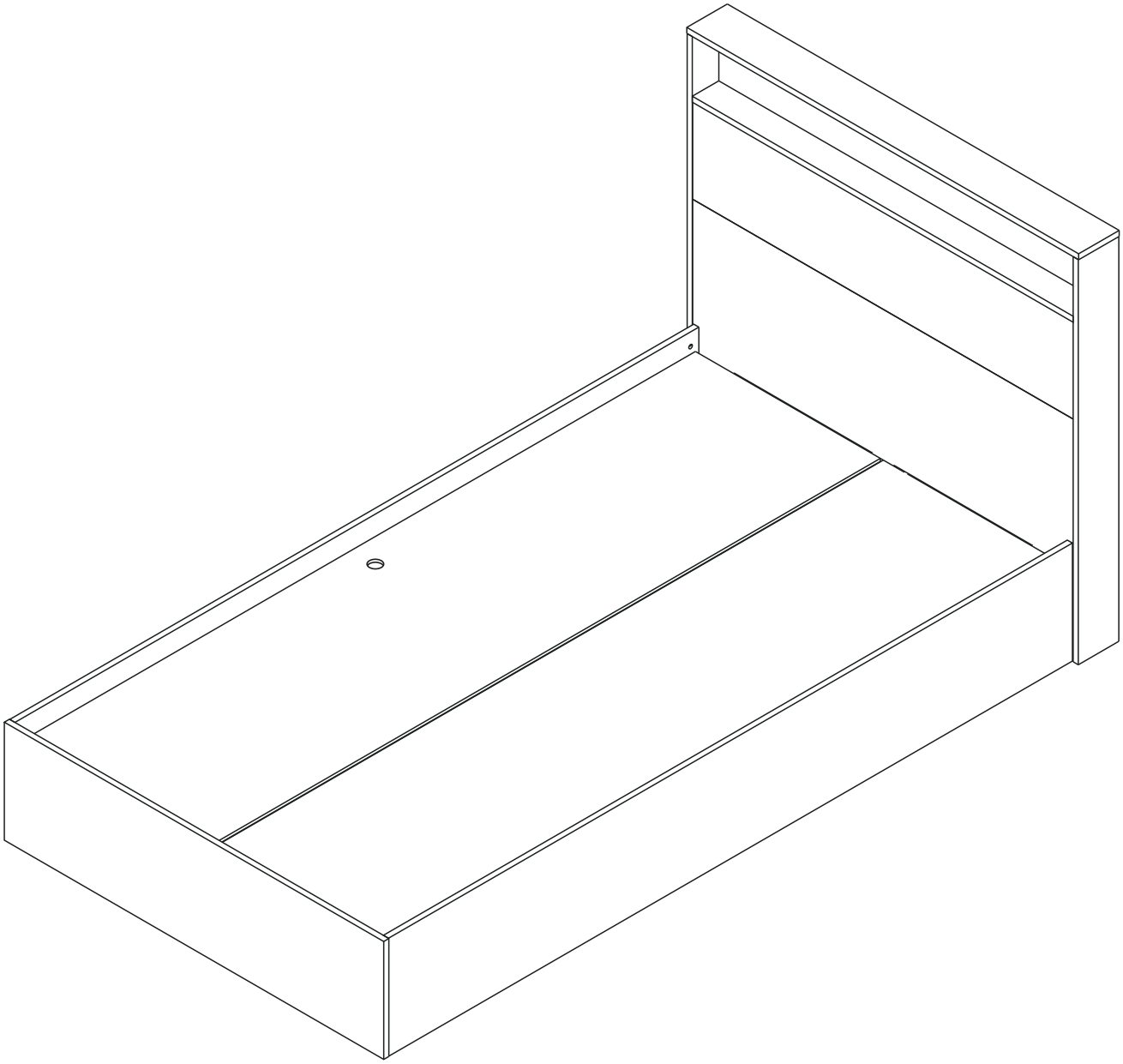

Indexlivingmall

CONNECT SYSTEM

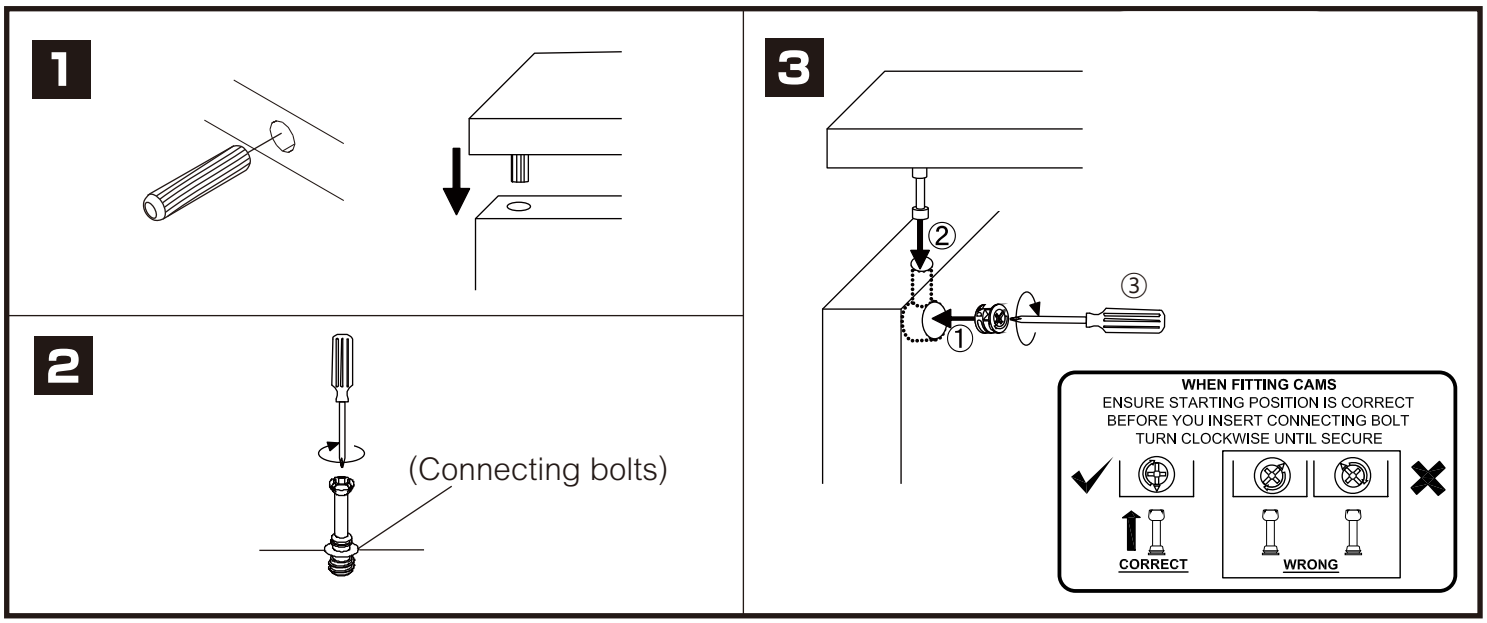

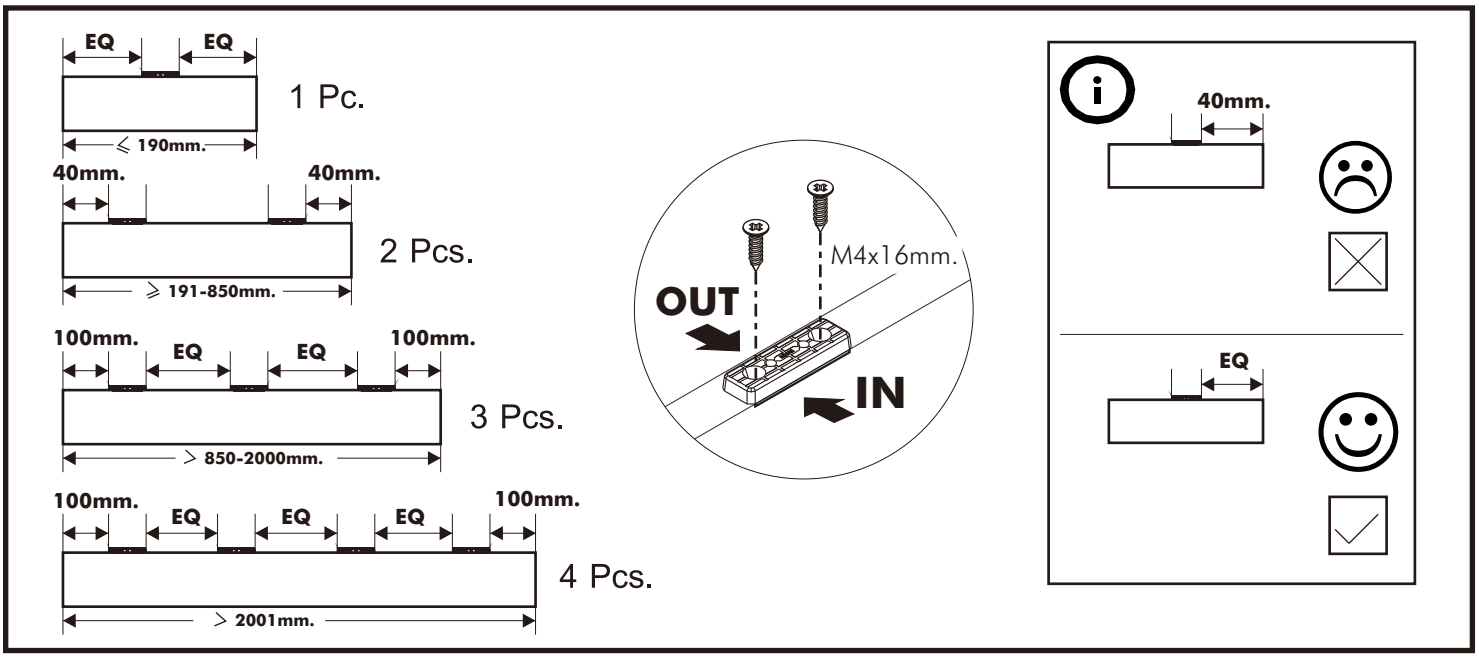

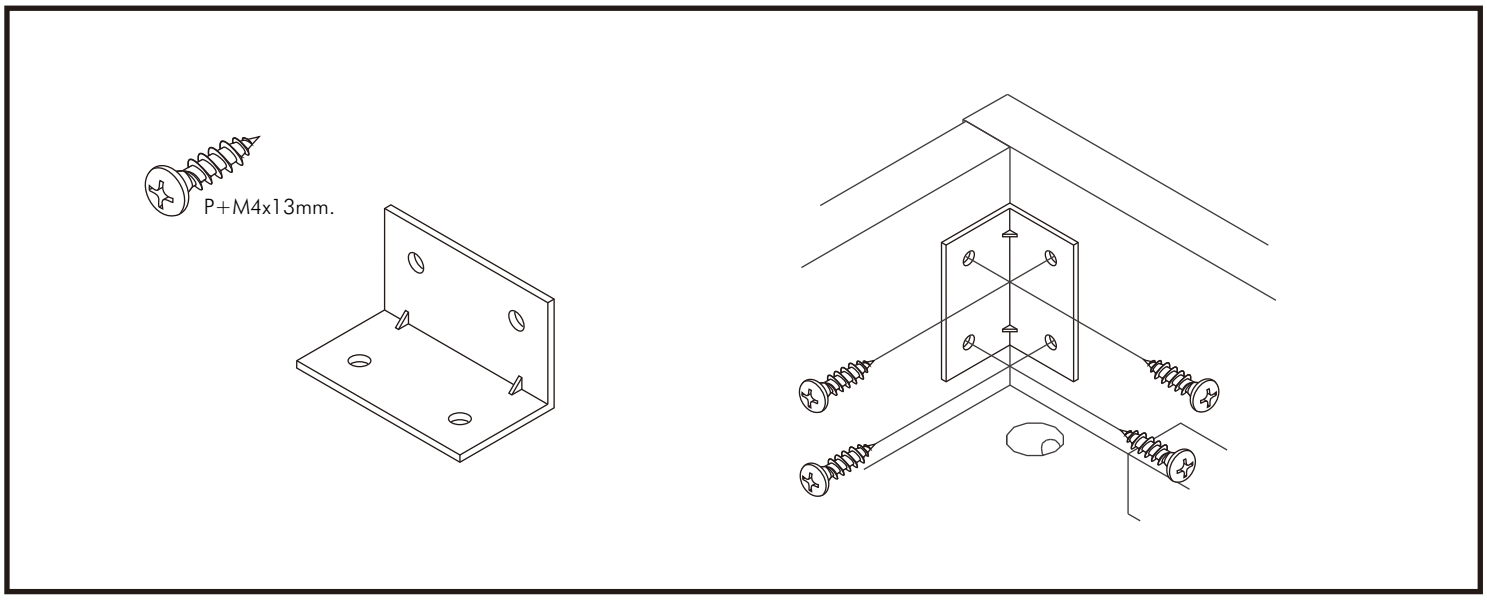

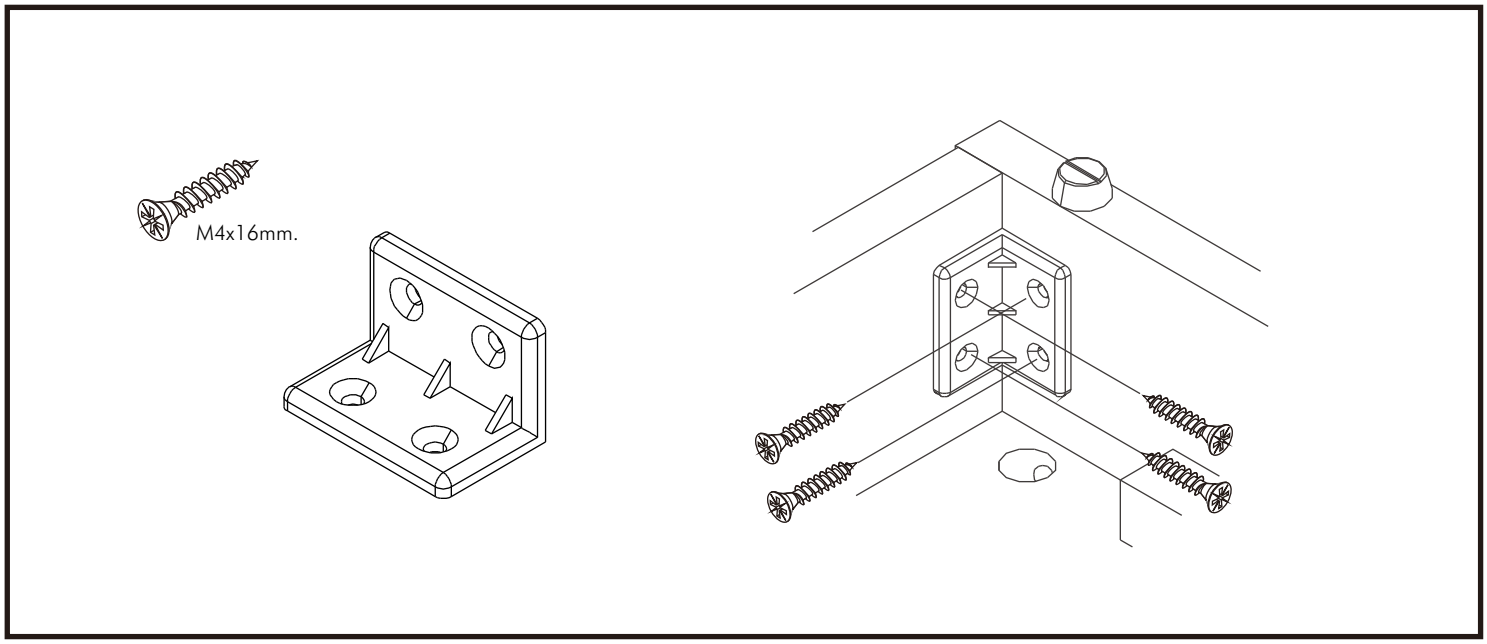
M4x16mm.

HARDWARE

-BODY SET

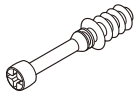

x 6

16mm.

x 6

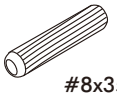

#8x35

x 30

M4x16mm.

x 128

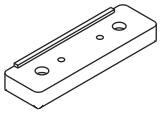

x 20

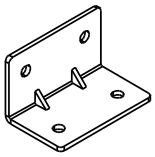

x 8

No.1

x 2

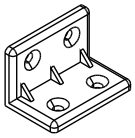

x 22

M4x16mm.

x 2

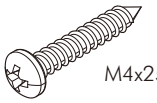

M4x25mm.

x 30

M4x13mm.

x 32

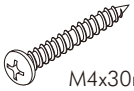

M4x30mm.

x 32

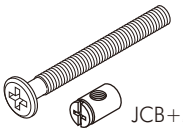

JCB+M6x60

x 4

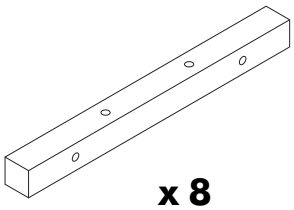

x 8

ASSEMBLY

-BODY SET

1.

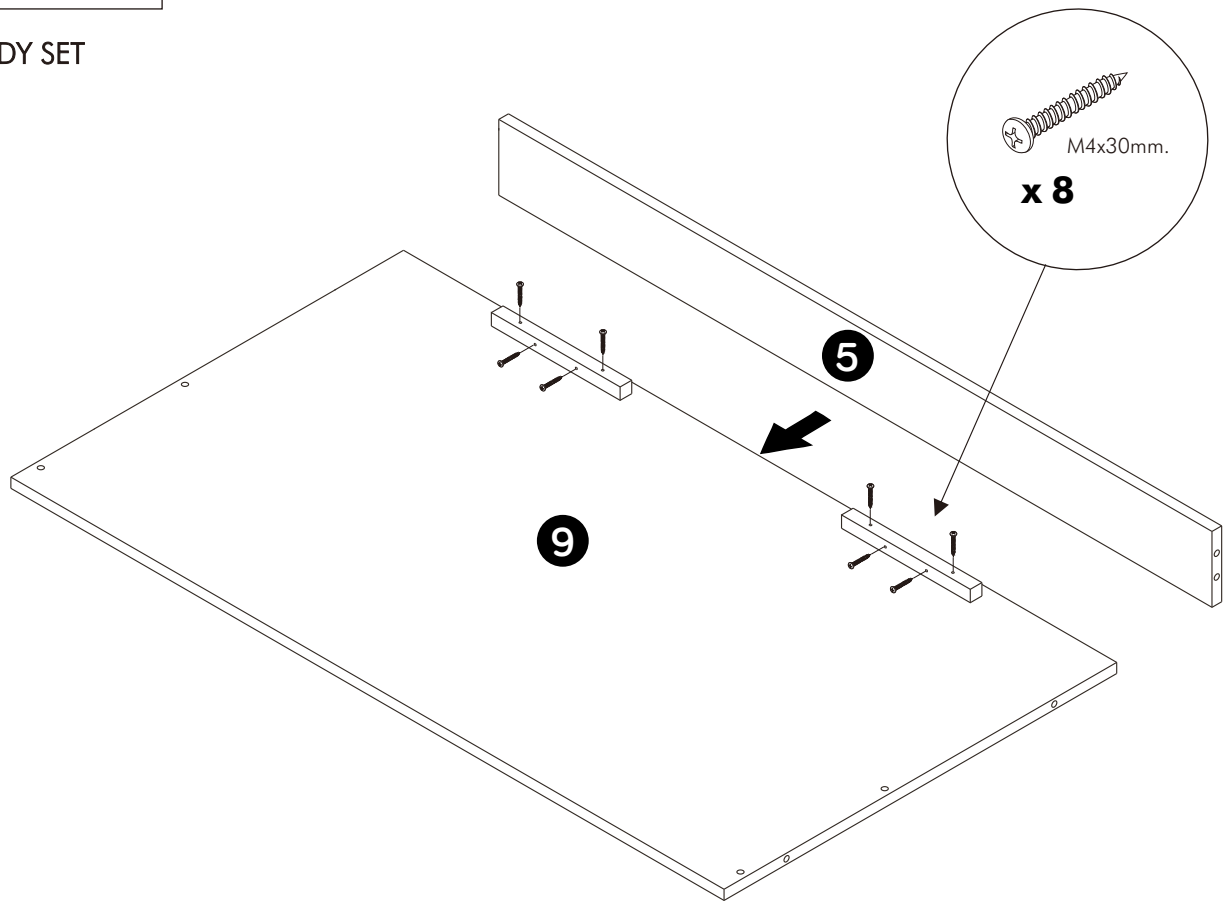

2.

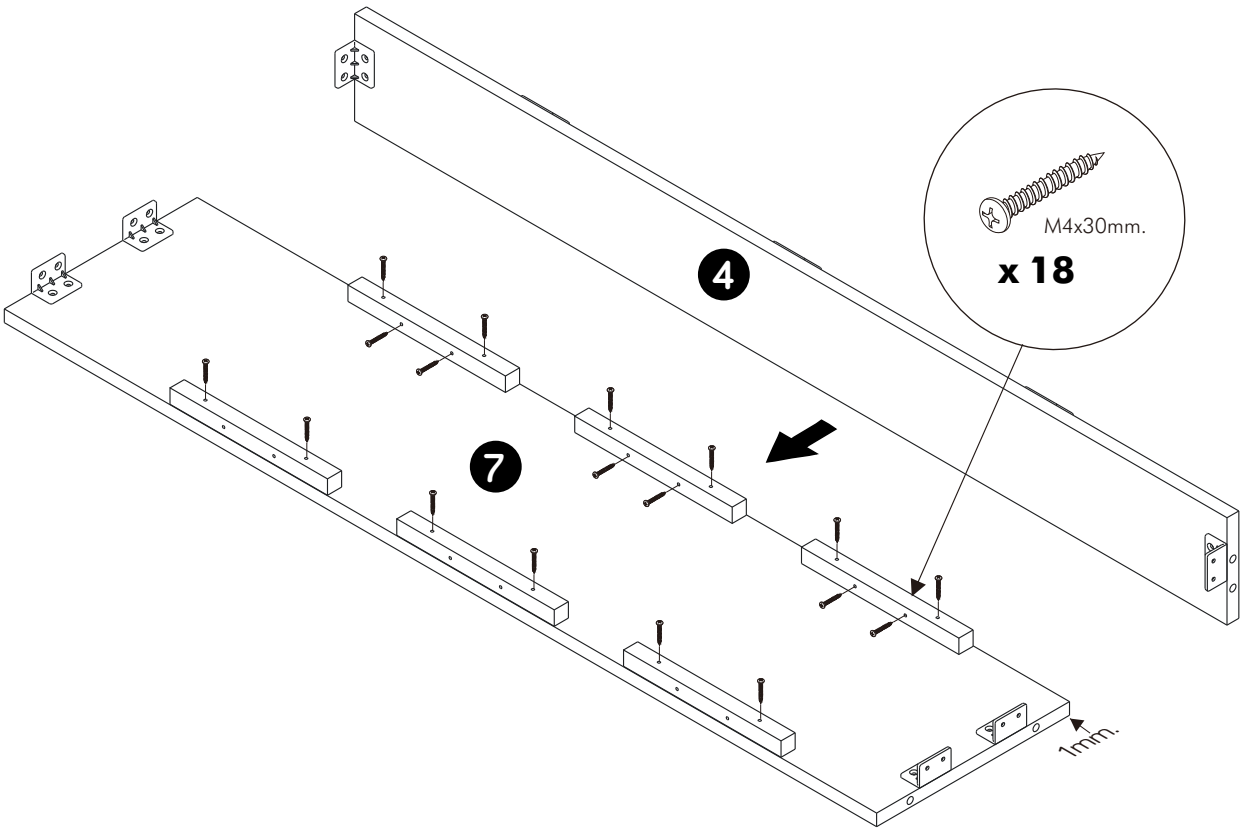

3.

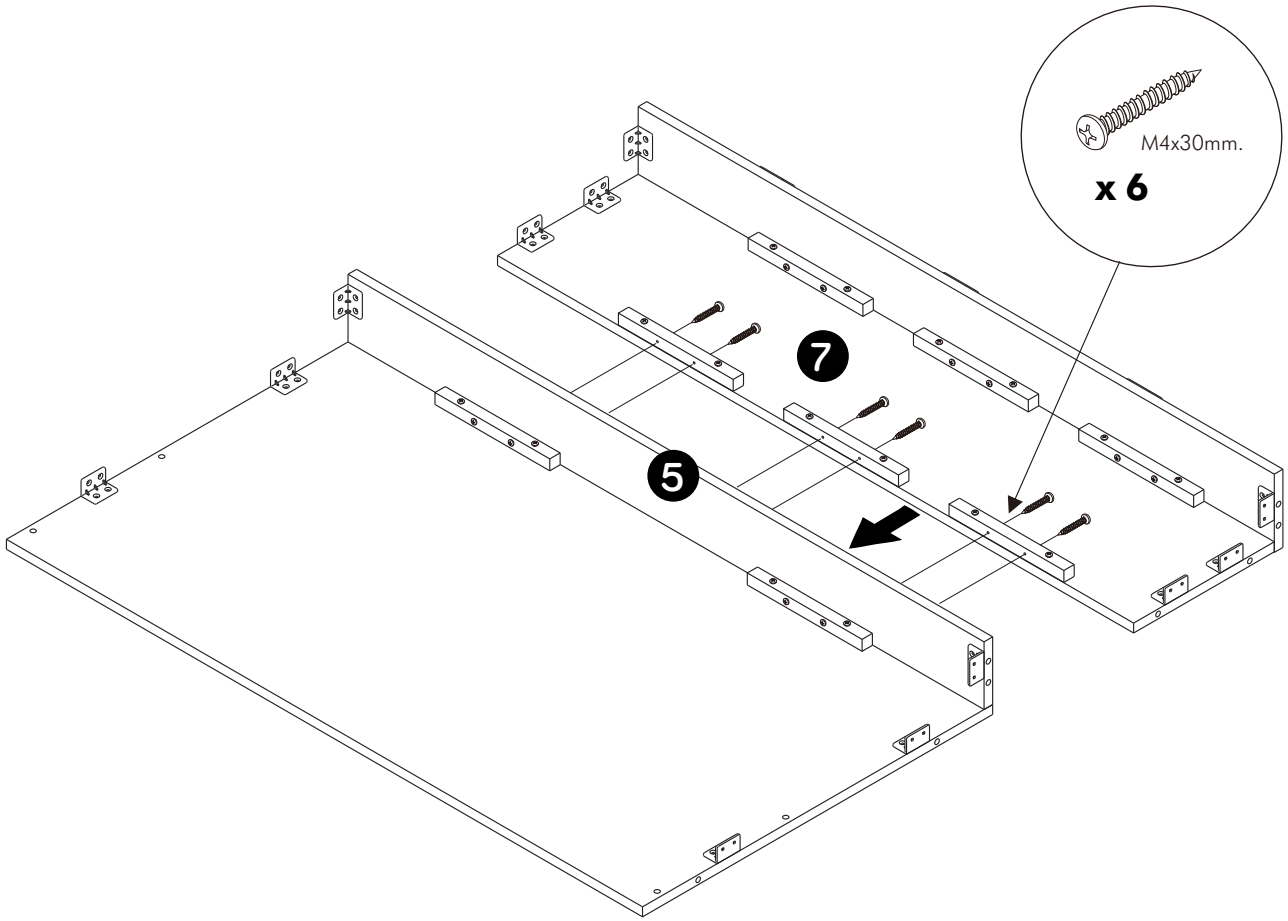

4.

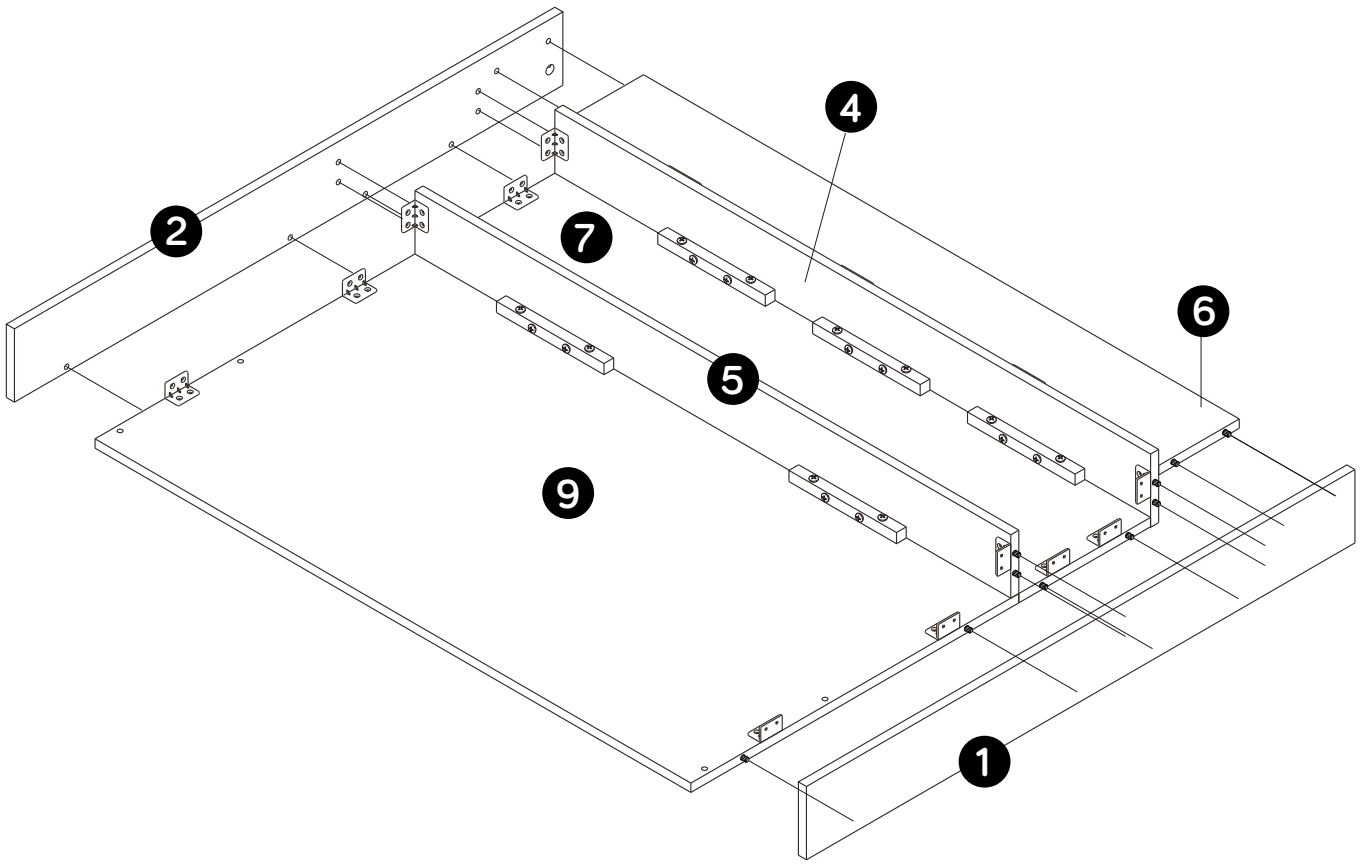

5.

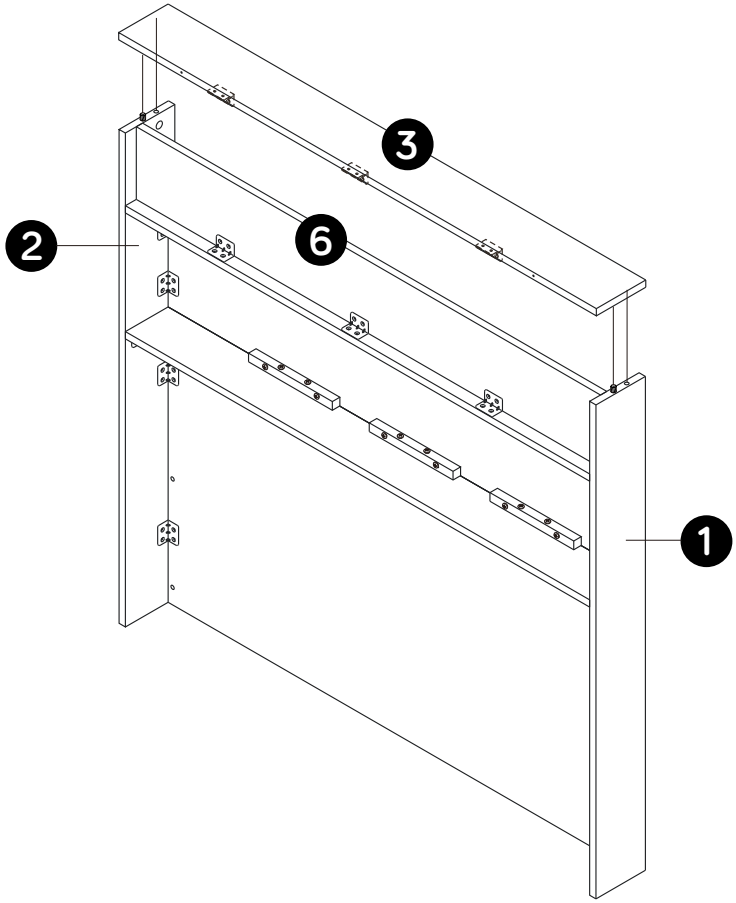

6.

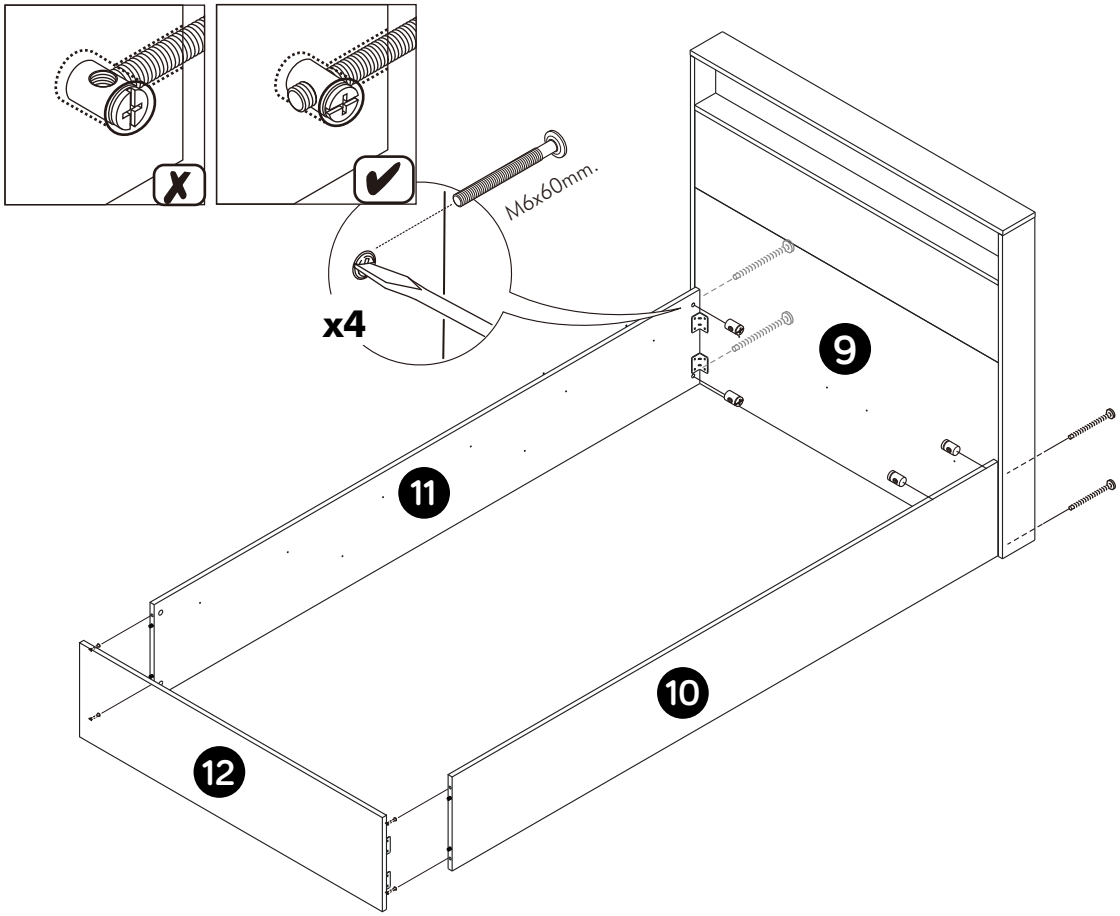

7.

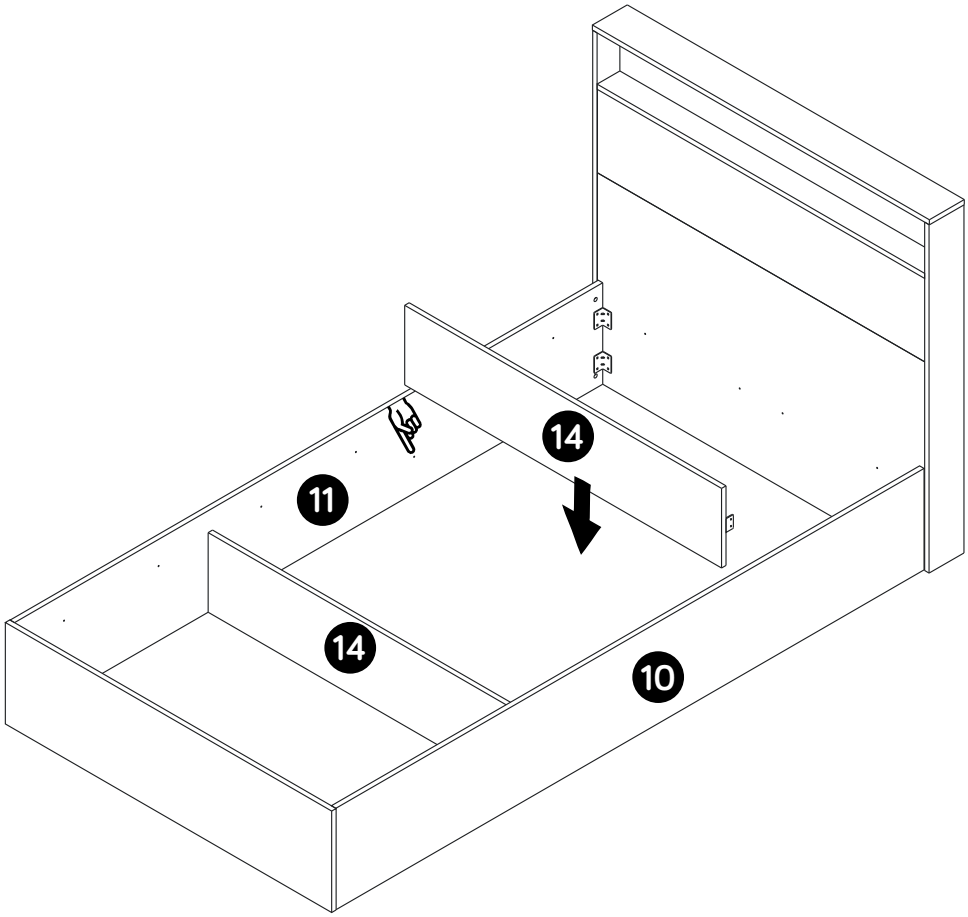

8.

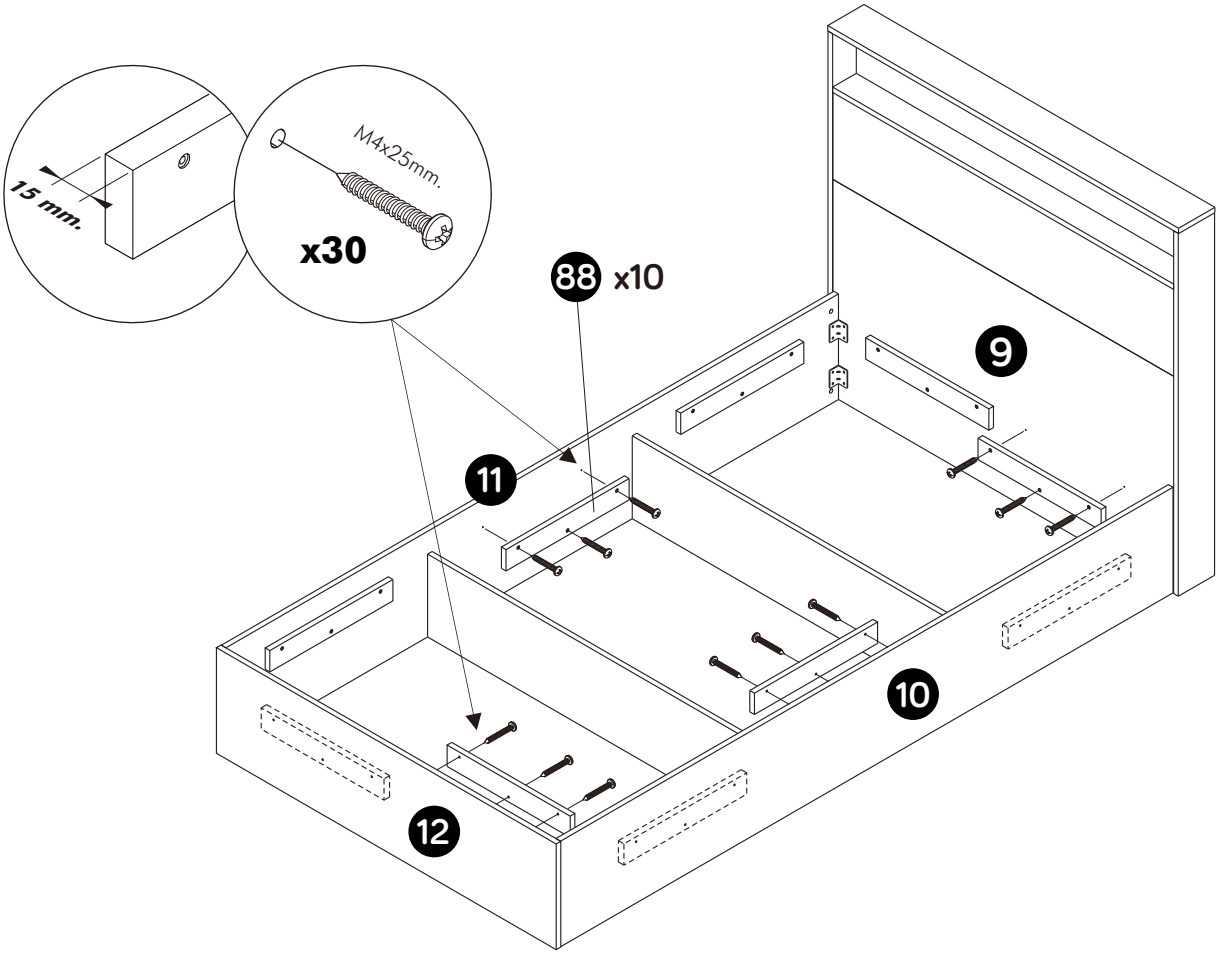

9.

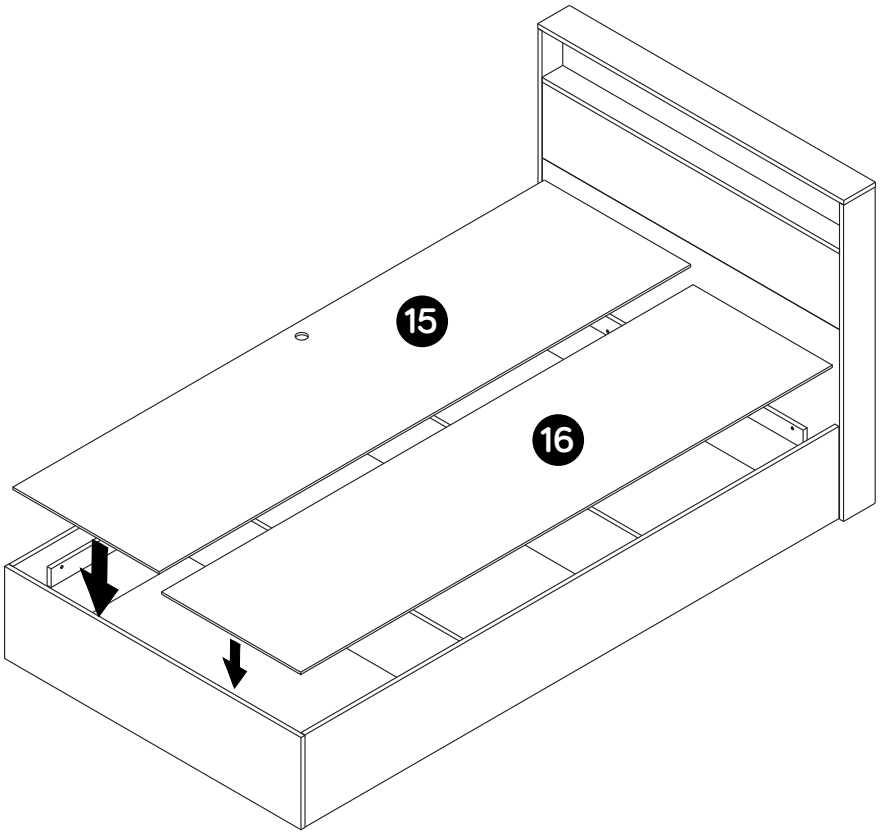
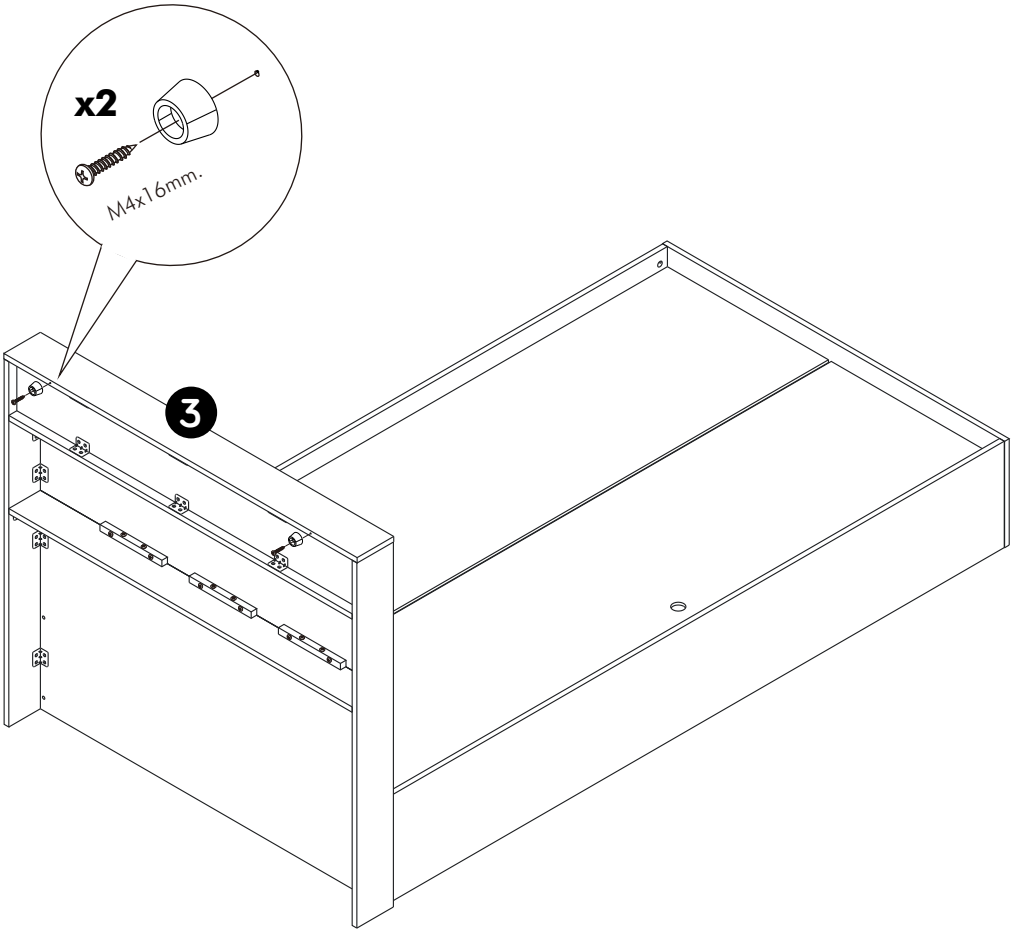
10.