ZENO-P

Carcase mini island 120cm.

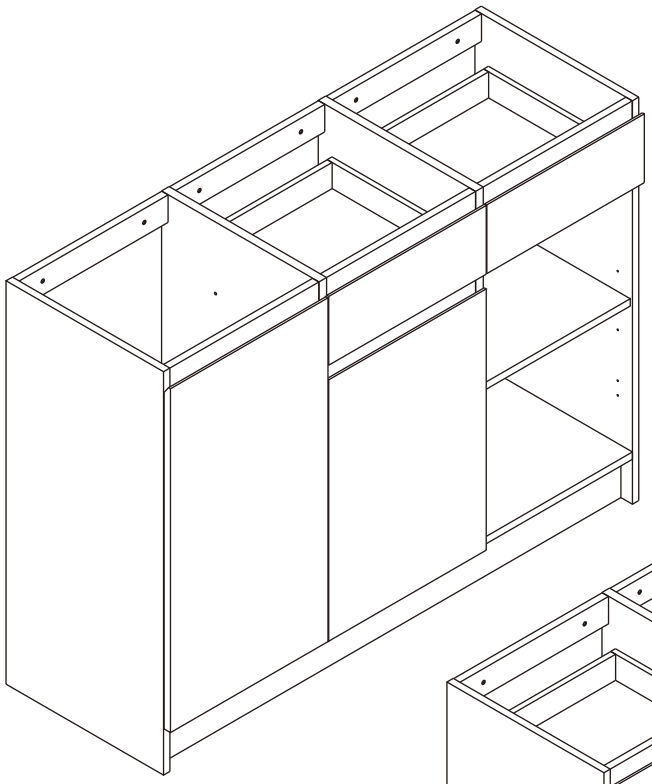

TYPE:LEFT

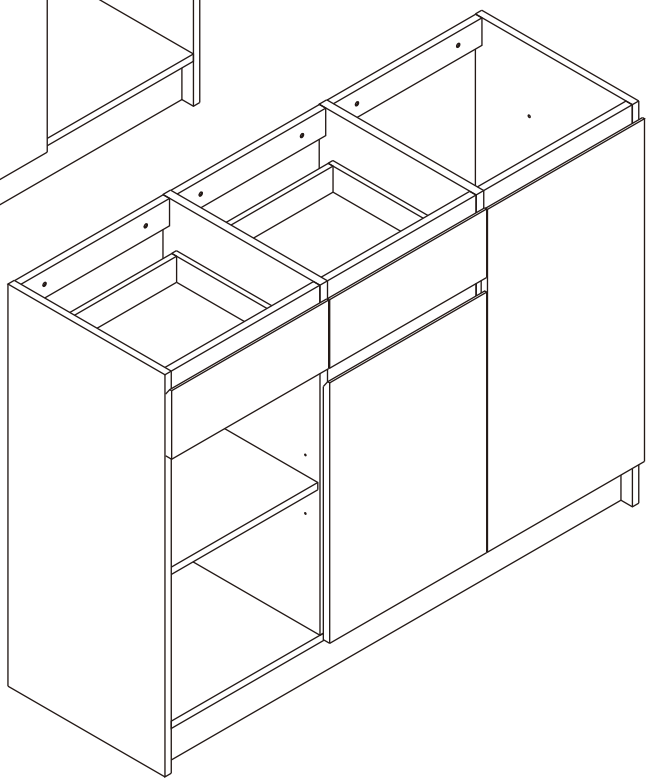

TYPE:RIGHT

Indexlivingmall

CONNECT SYSTEM

1

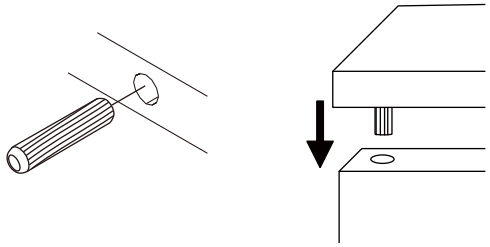

2

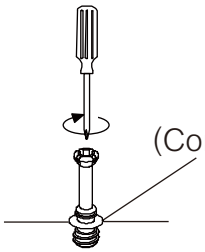

3

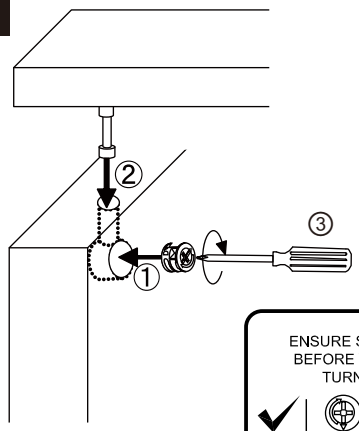

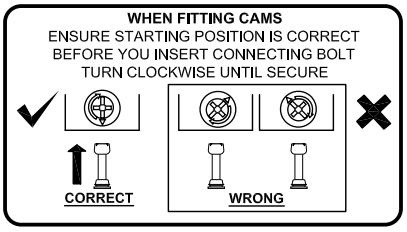

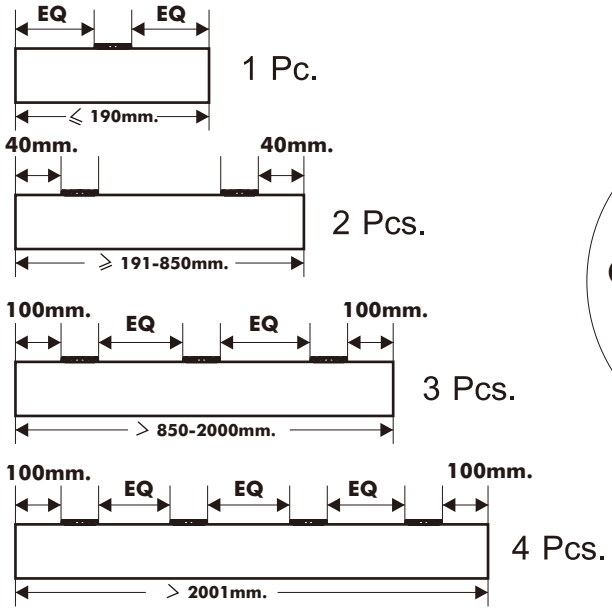

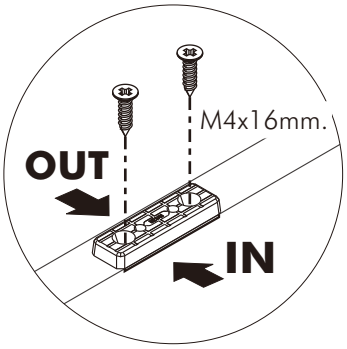

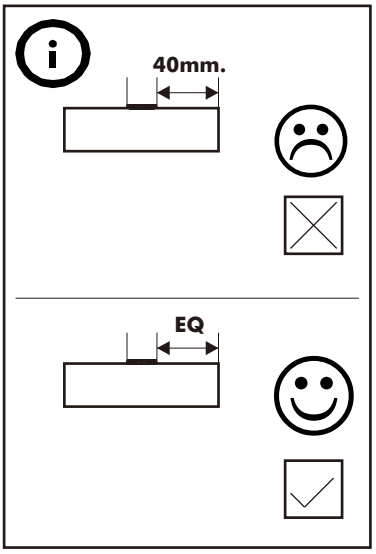



M4x16mm.

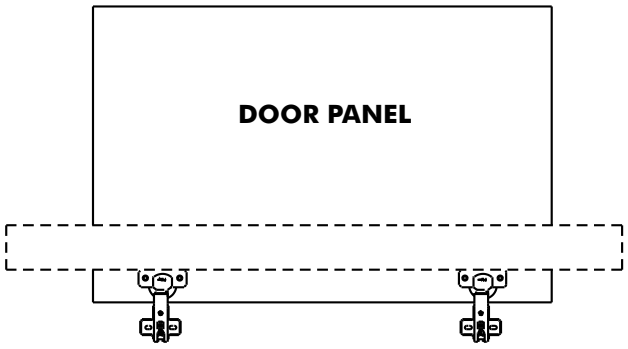

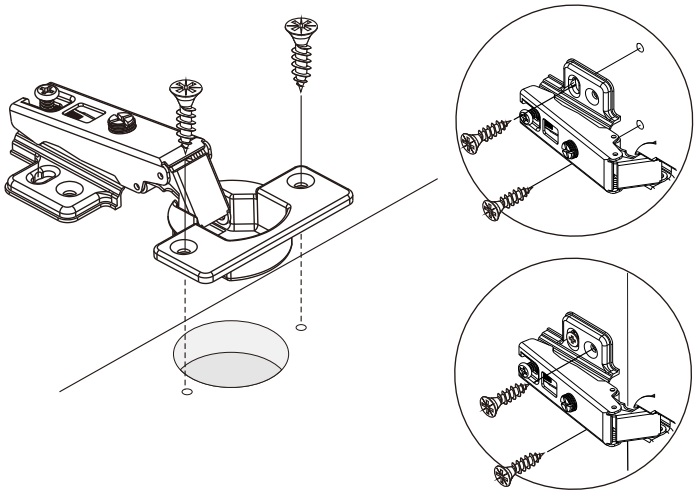



M3.5x13mm.

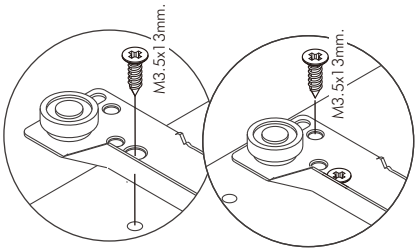

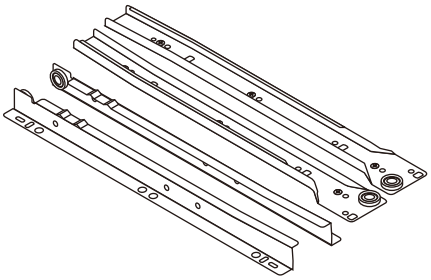

28mm.

1

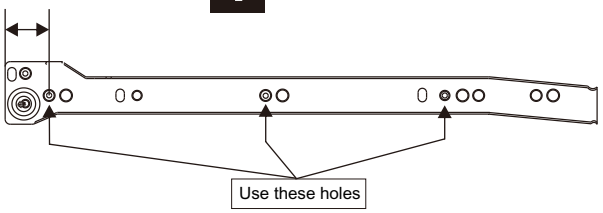

2

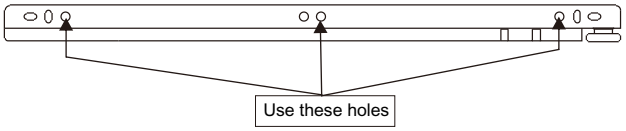



M4x16mm.

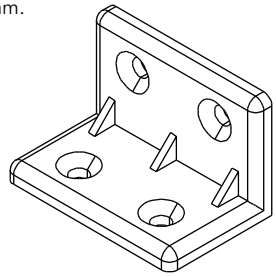

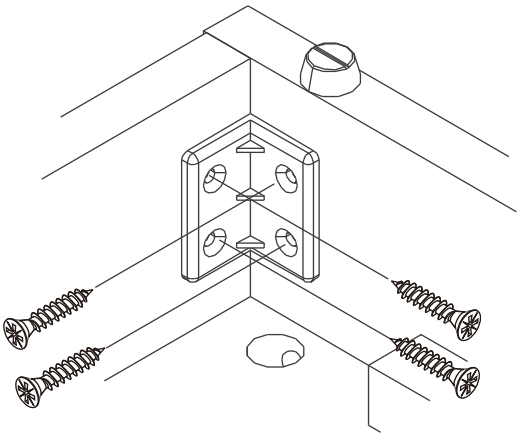

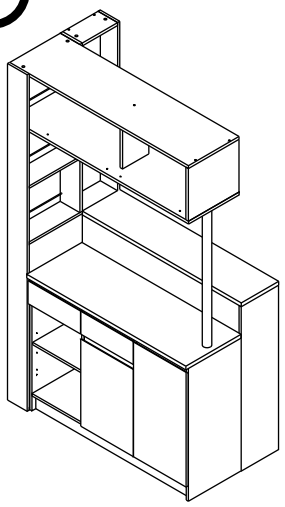

TYPE:A1
High Bar Island

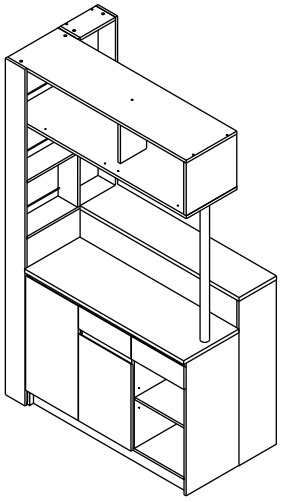

TYPE:A2
High Bar Island

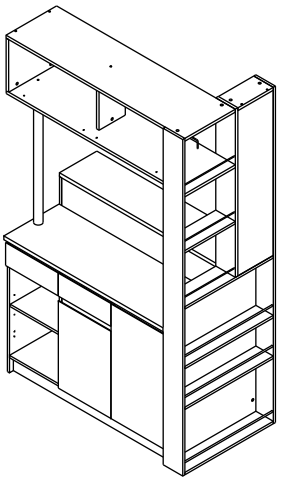

TYPE:A3
High Bar Island

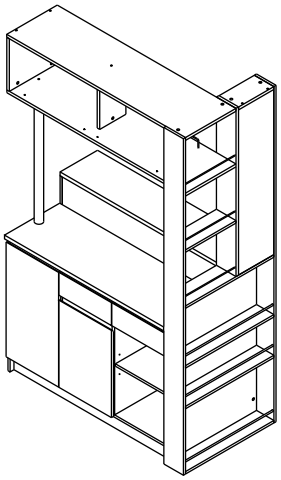

TYPE:A4
High Bar Island

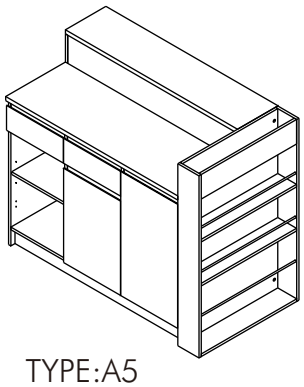

TYPE:A5
Couter Bar Island

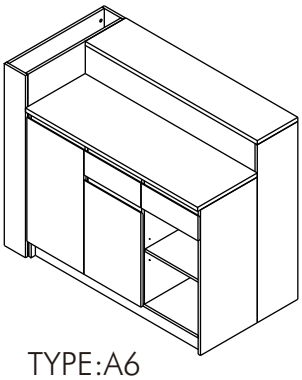

TYPE:A6
Couter Bar Island

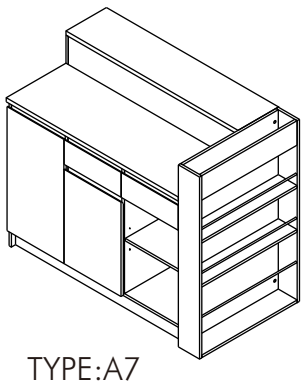

TYPE:A7
Couter Bar Island

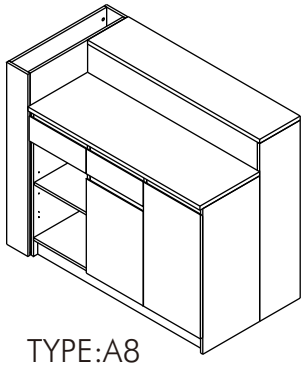

TYPE:A8
Couter Bar Island

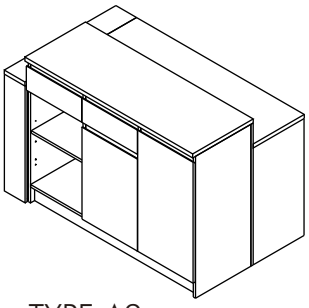

TYPE:A9
Table Mini Island

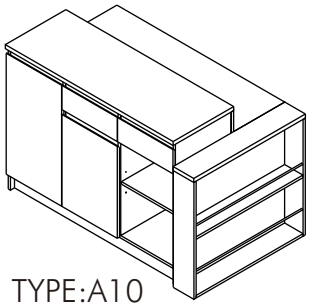

TYPE:A10
Table Mini Island

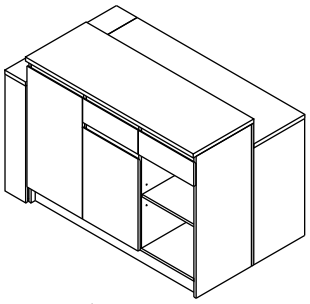

TYPE:A11
Table Mini Island

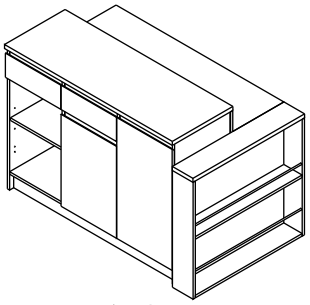

TYPE:A12
Table Mini Island

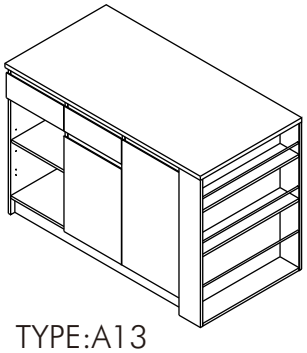

TYPE:A13
Counter Mini Island

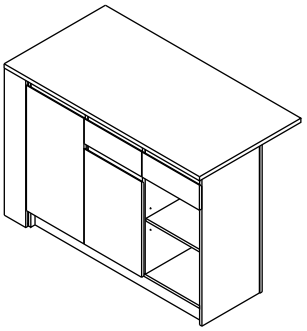

TYPE:A14
Counter Mini Island

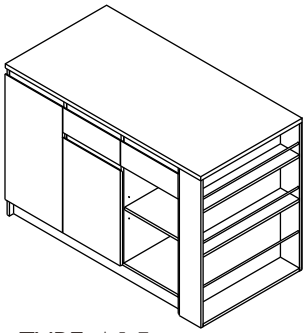

TYPE:A15
Counter Mini Island

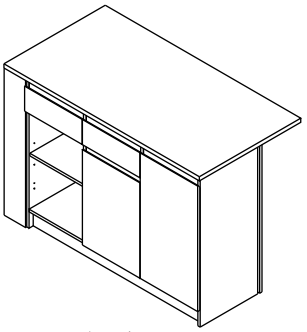

TYPE:A16
Counter Mini Island

HARDWARE

-BODY SET

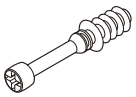

x 24



x 24

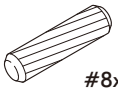

x 36

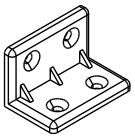

x 18

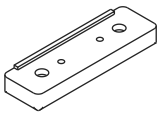

x 14



x 12

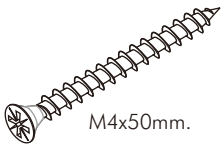

x 4



x 16



x 8



x 88

-DRAWER SET

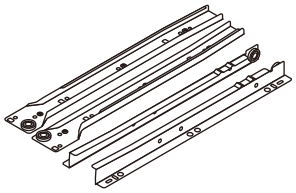

x 2



x 28



x 16



x 4

-DOOR SET

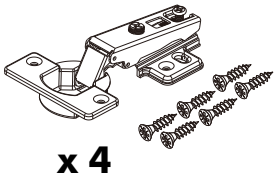

x 4



x 4



x 4

1.

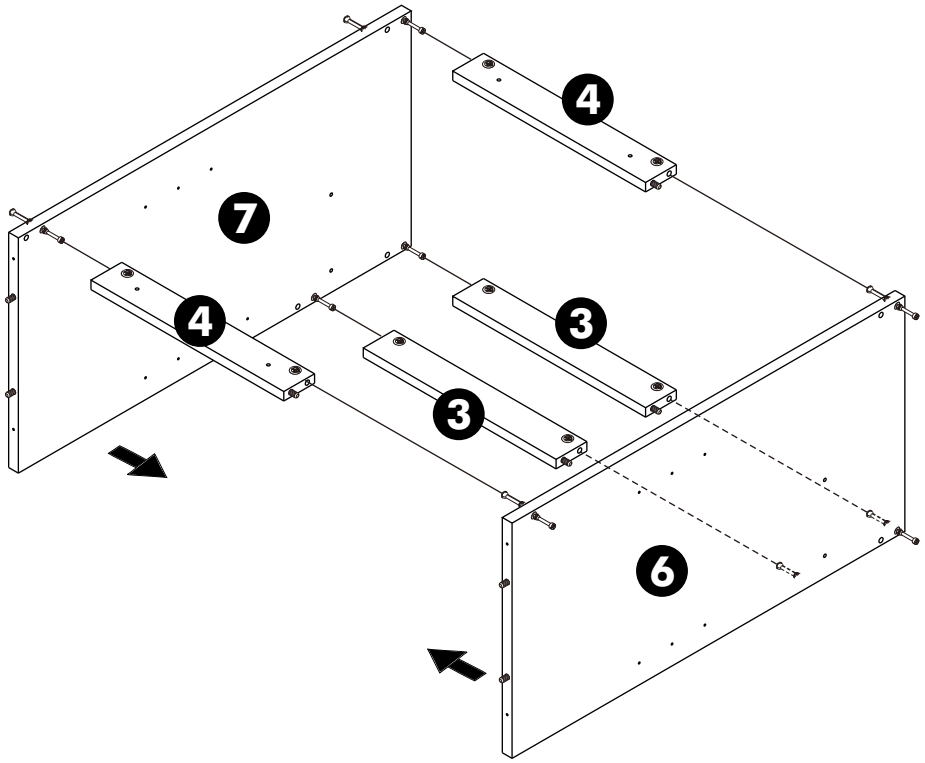

2.

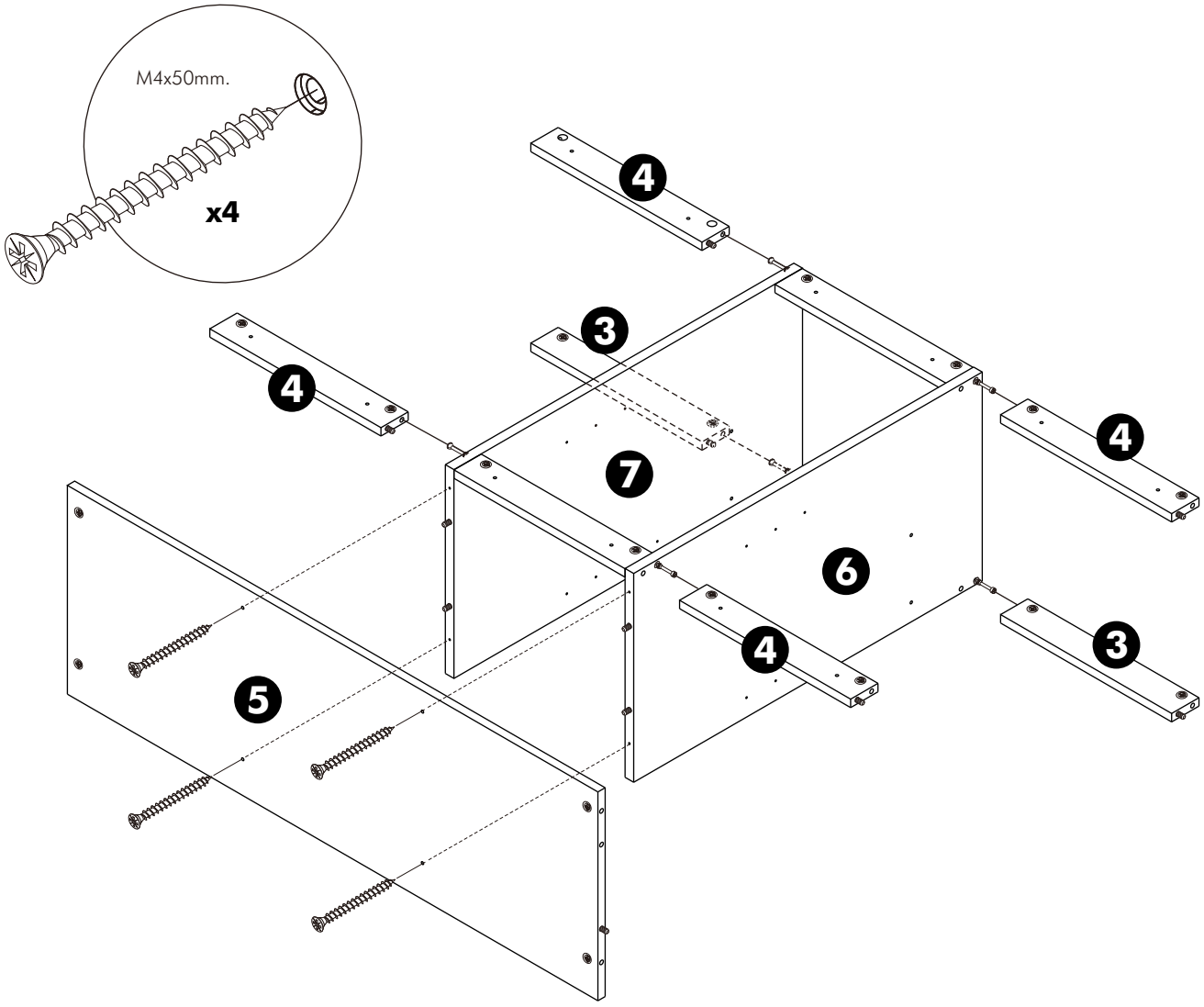

3.

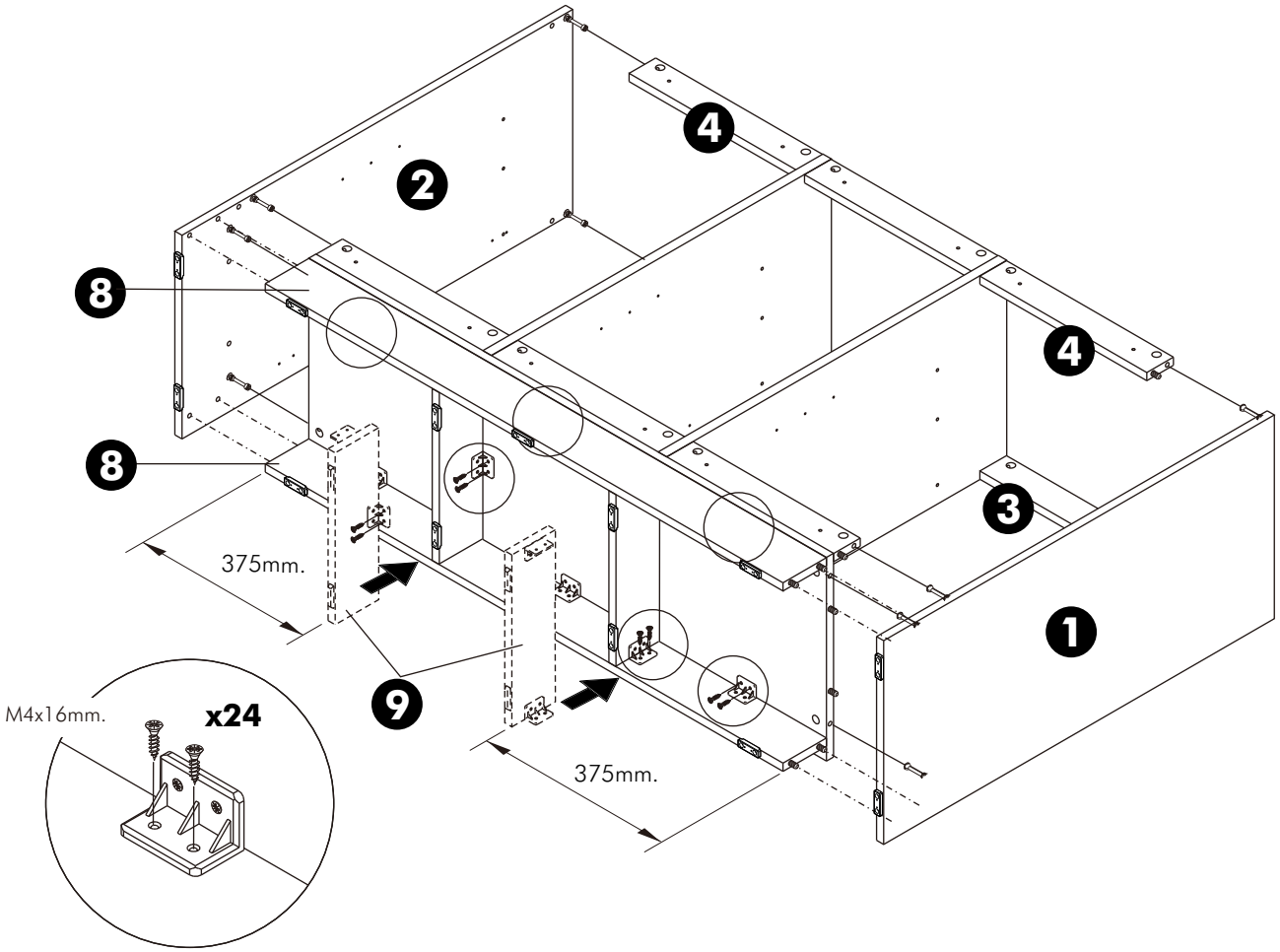
2
4
8
4
8
3
375mm.
1
9
M4x16mm.
x24
375mm.

4.

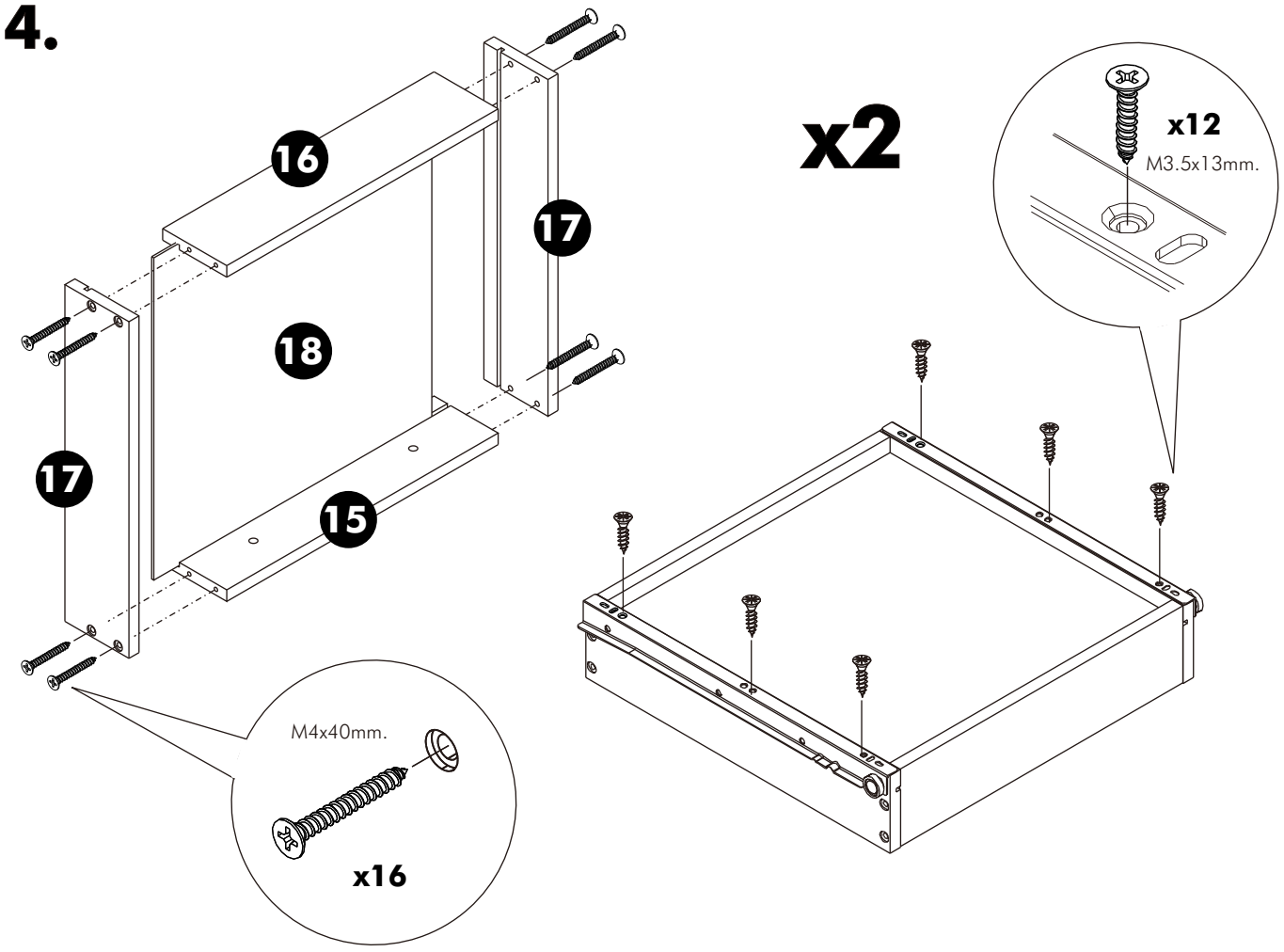
16
17
18
17
15
M4x40mm.
x16
x2
x12
M3.5x13mm.

5.

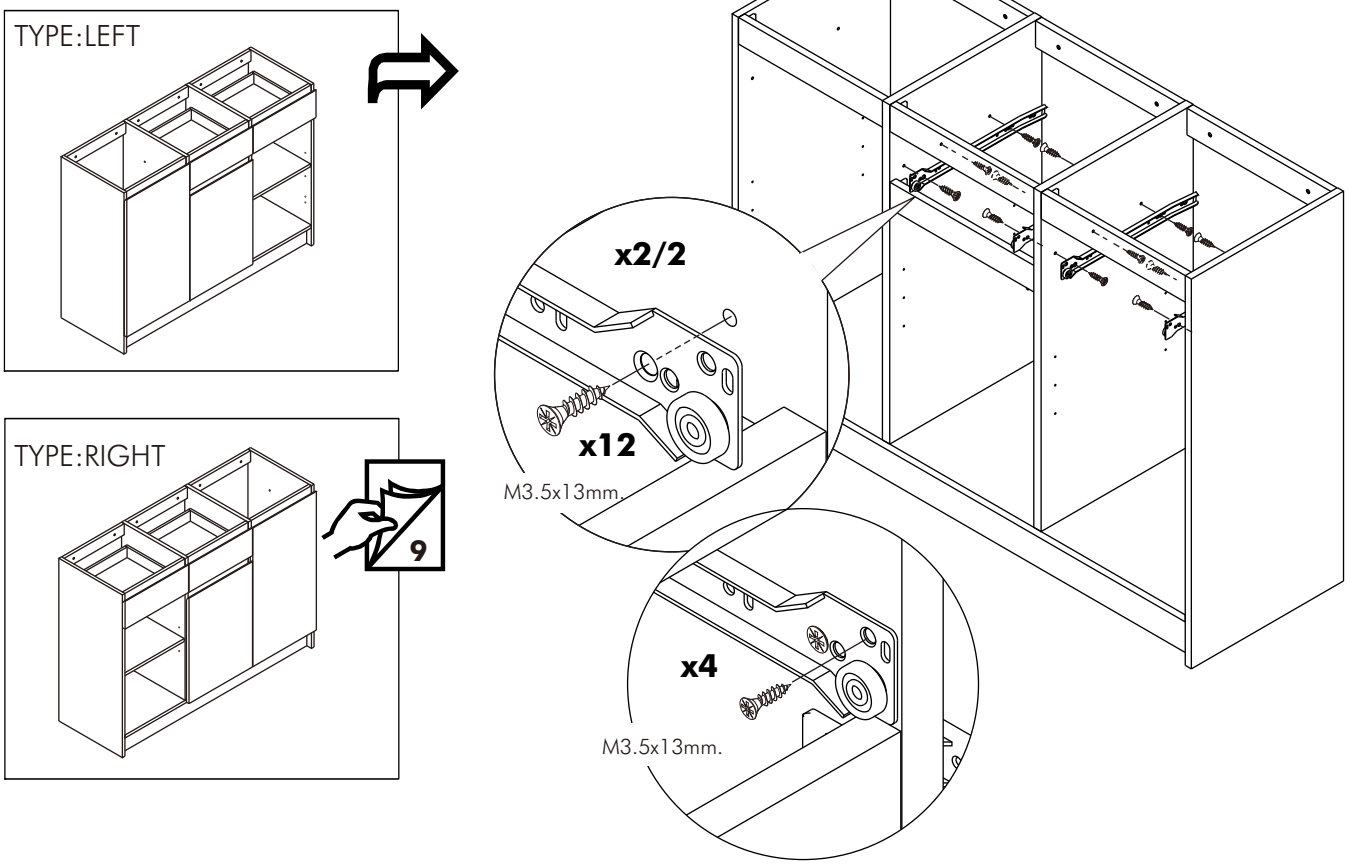
TYPE:LEFT
TYPE:RIGHT
9
x2/2
x12
M3.5x13mm.
x4
M3.5x13mm.

6.

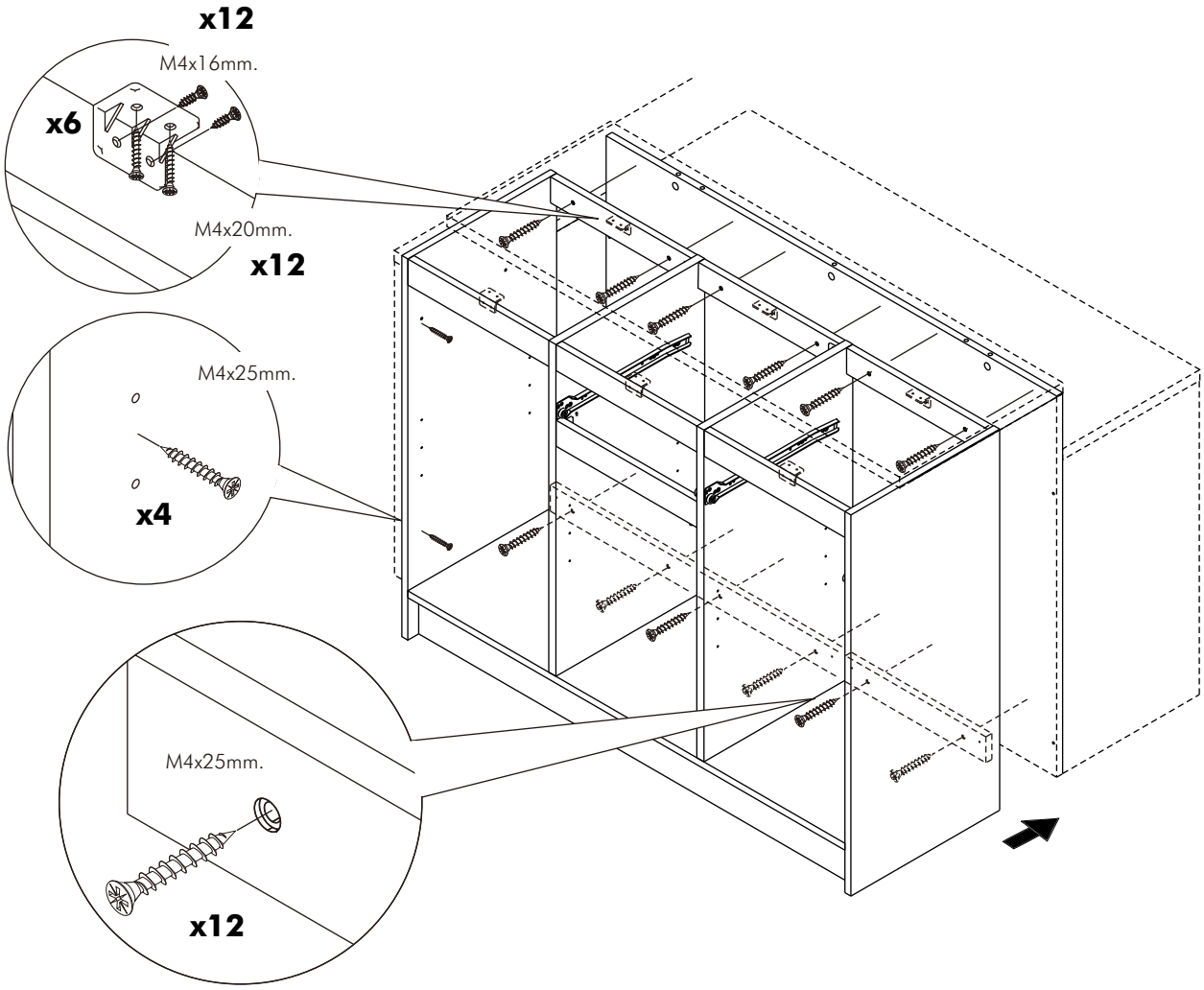
x12
M4x16mm.
x6
M4x20mm.
x12
M4x25mm.
x4
M4x25mm.
x12

7.

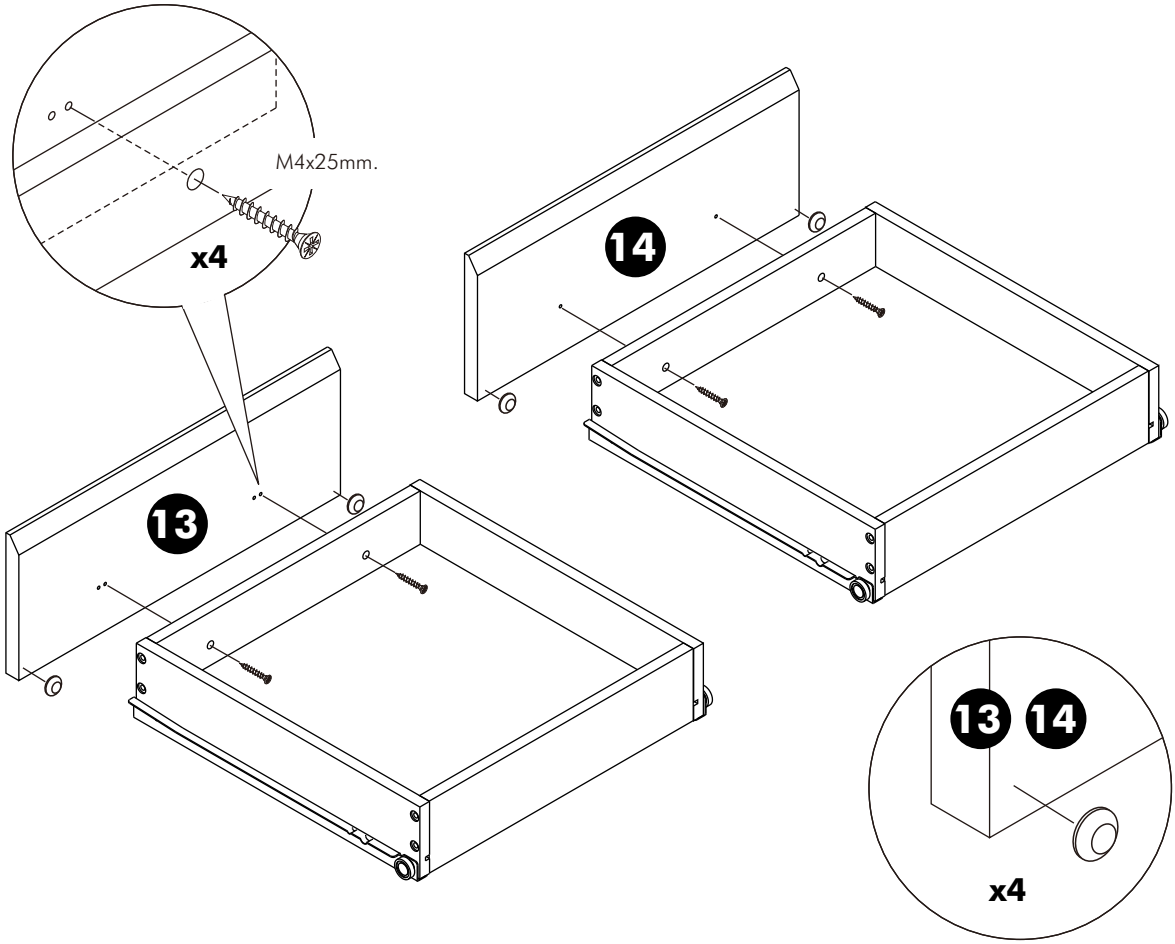

8.

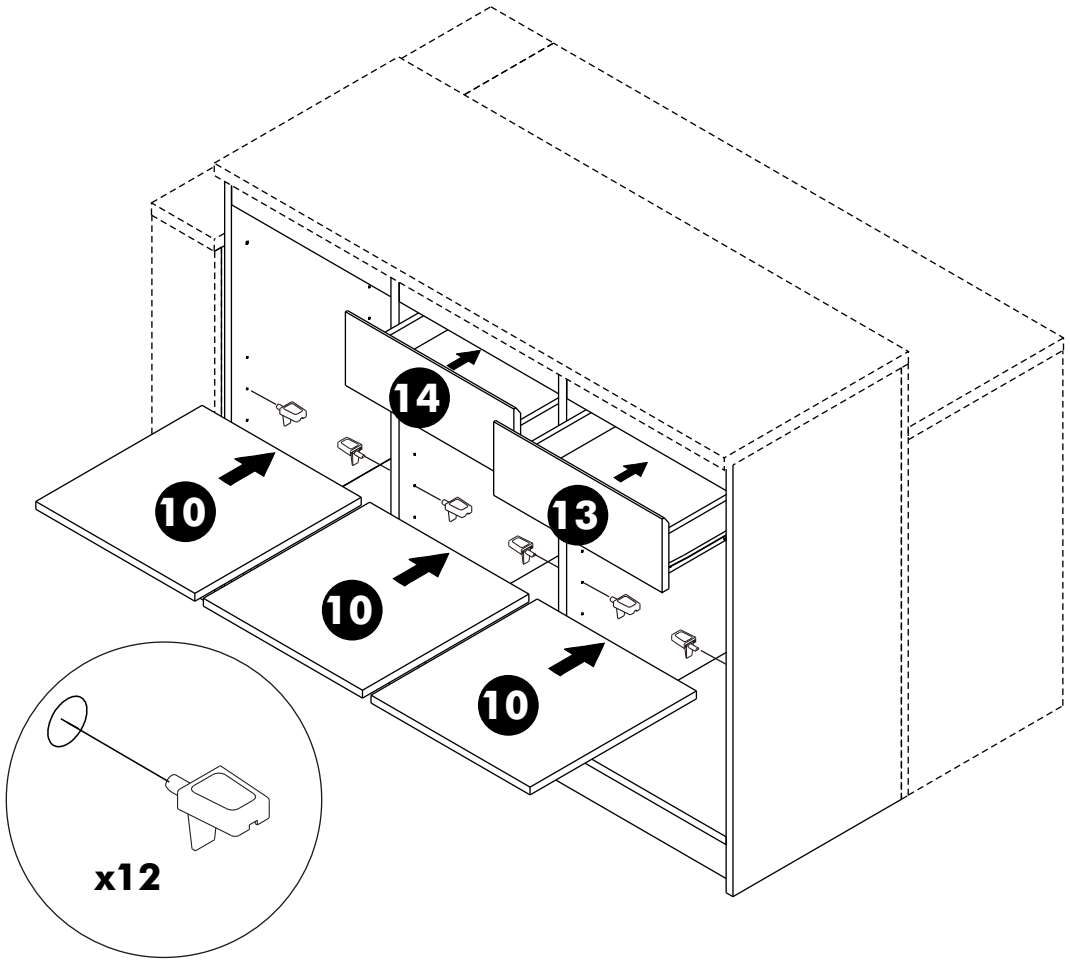

9.

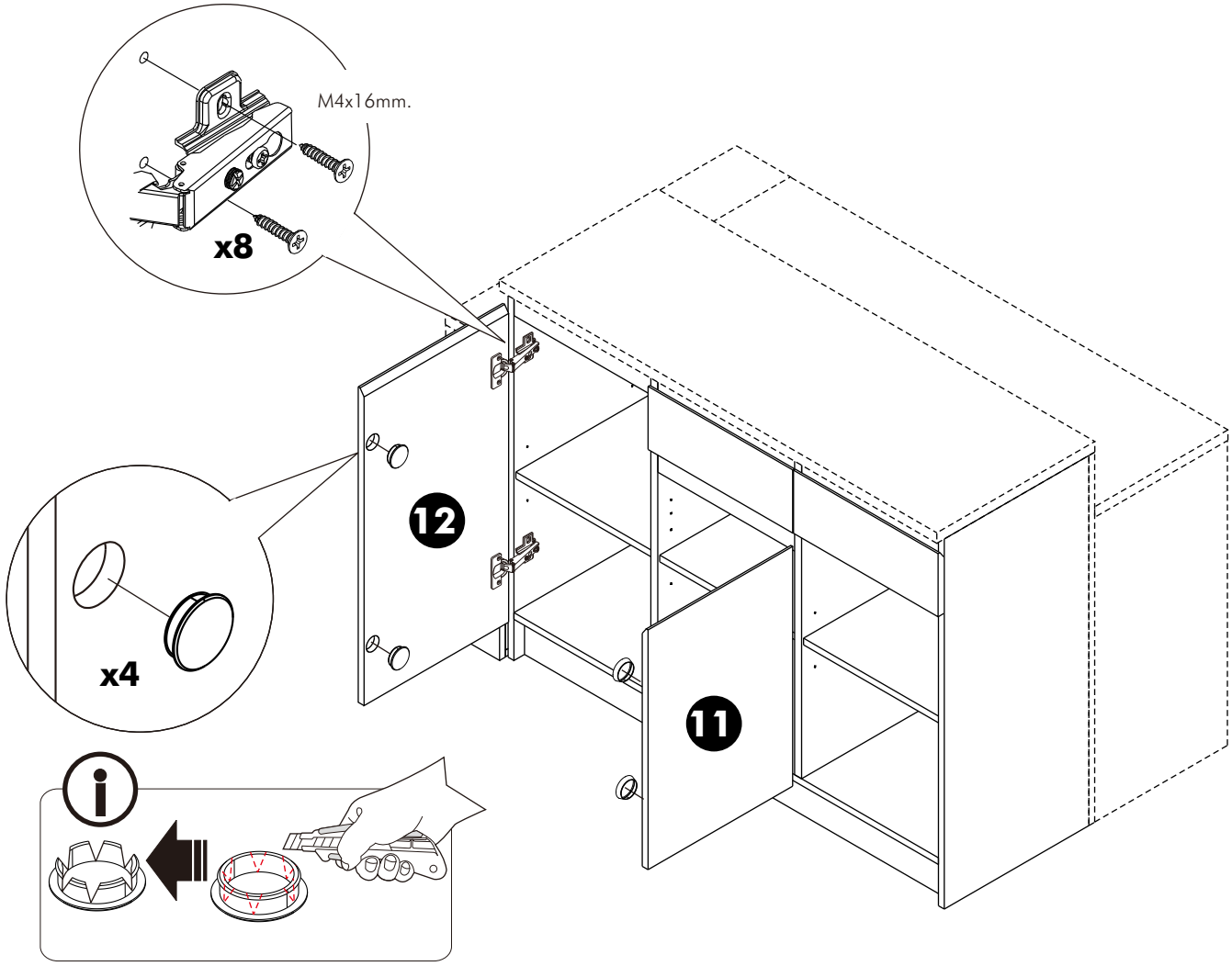

5.

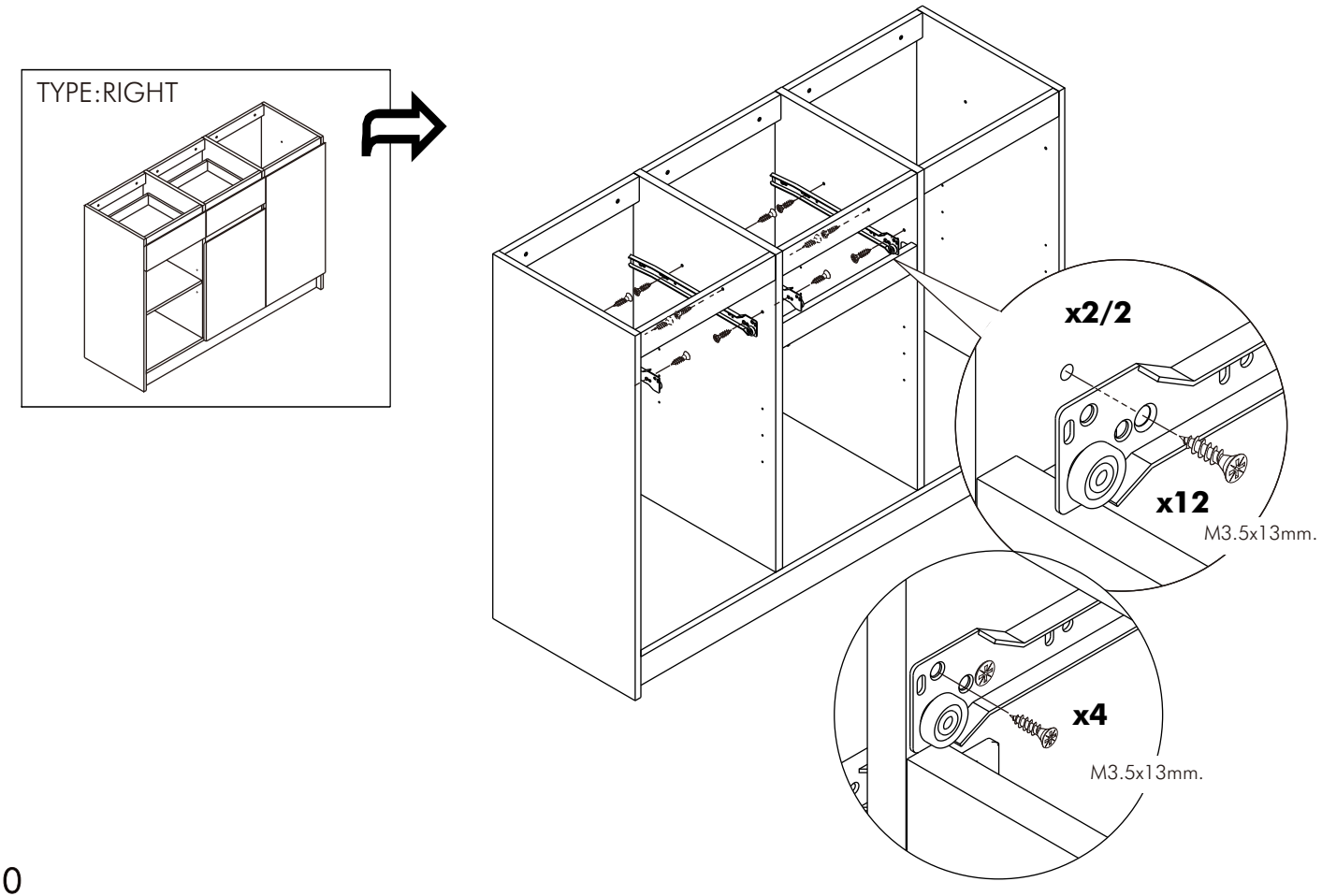

6.

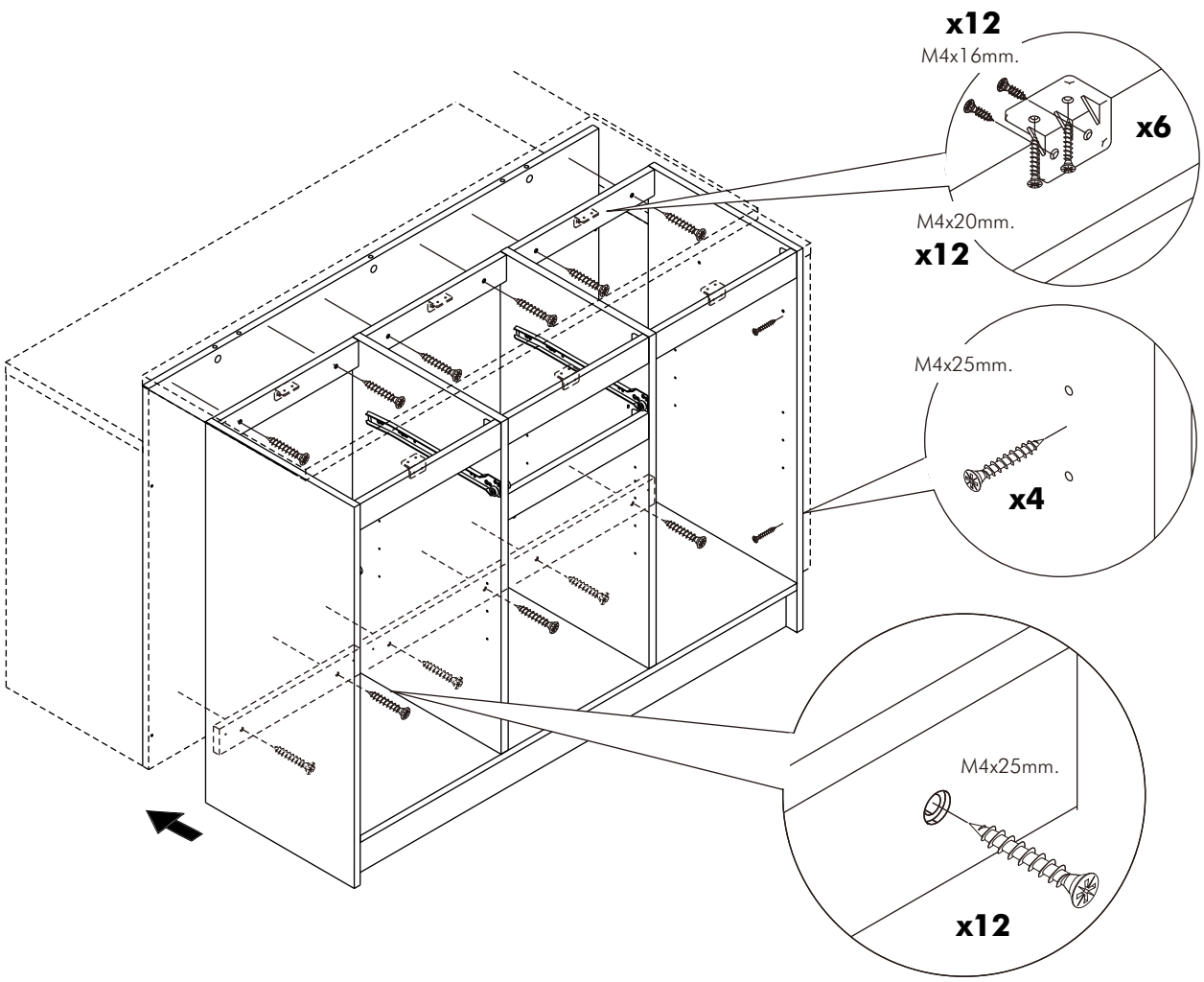
x12
M4x16mm.
x6
M4x20mm.
x12
M4x25mm.
x4
M4x25mm.
x12

7.

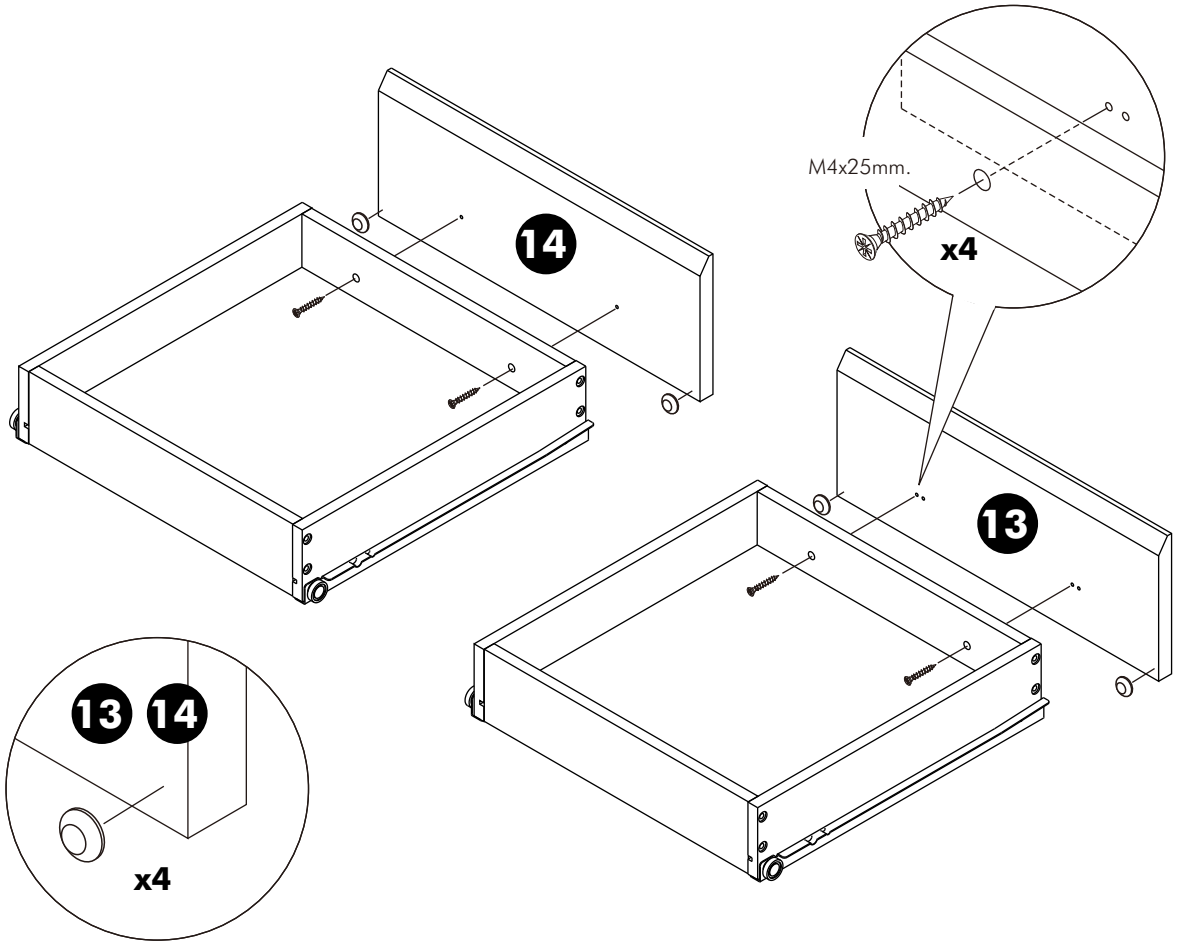
14
M4x25mm.
x4
13
13
14
x4

8.

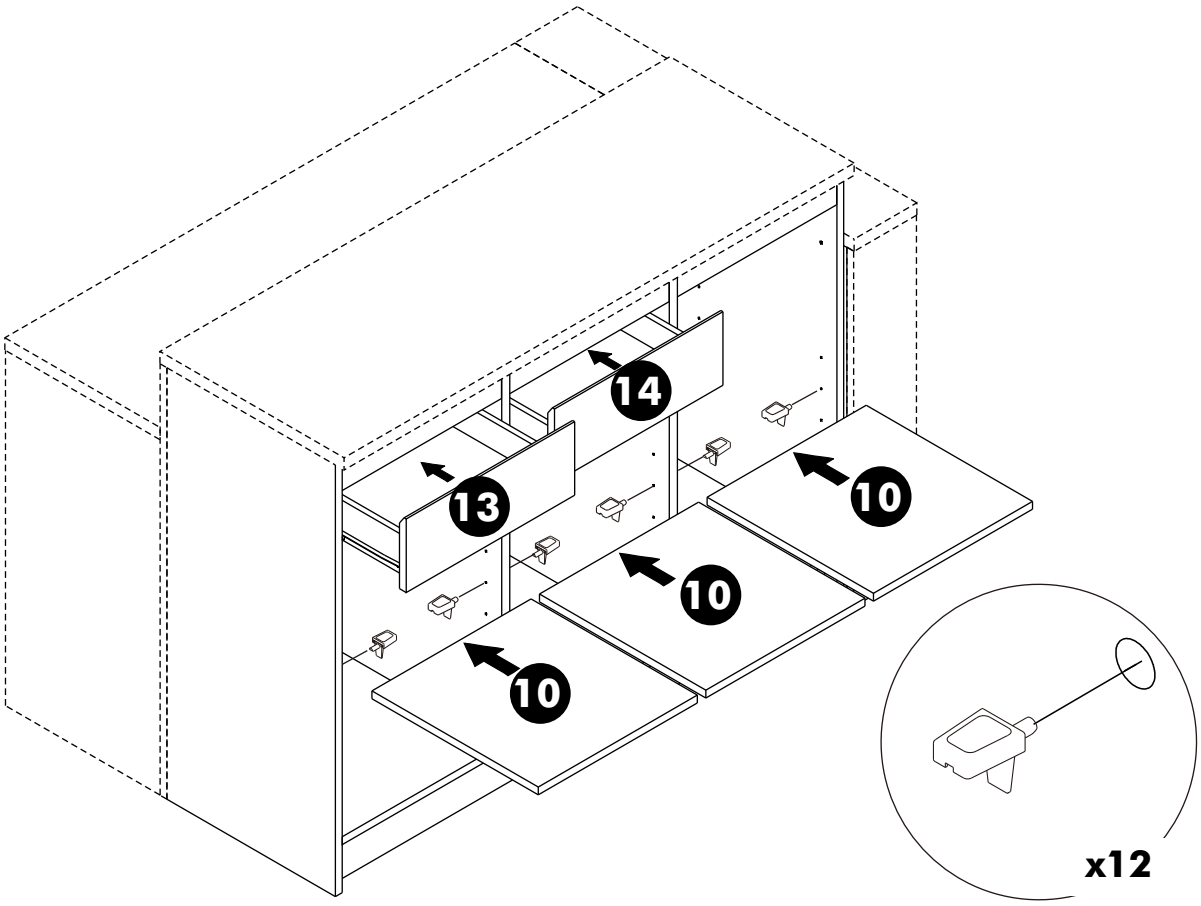

9.

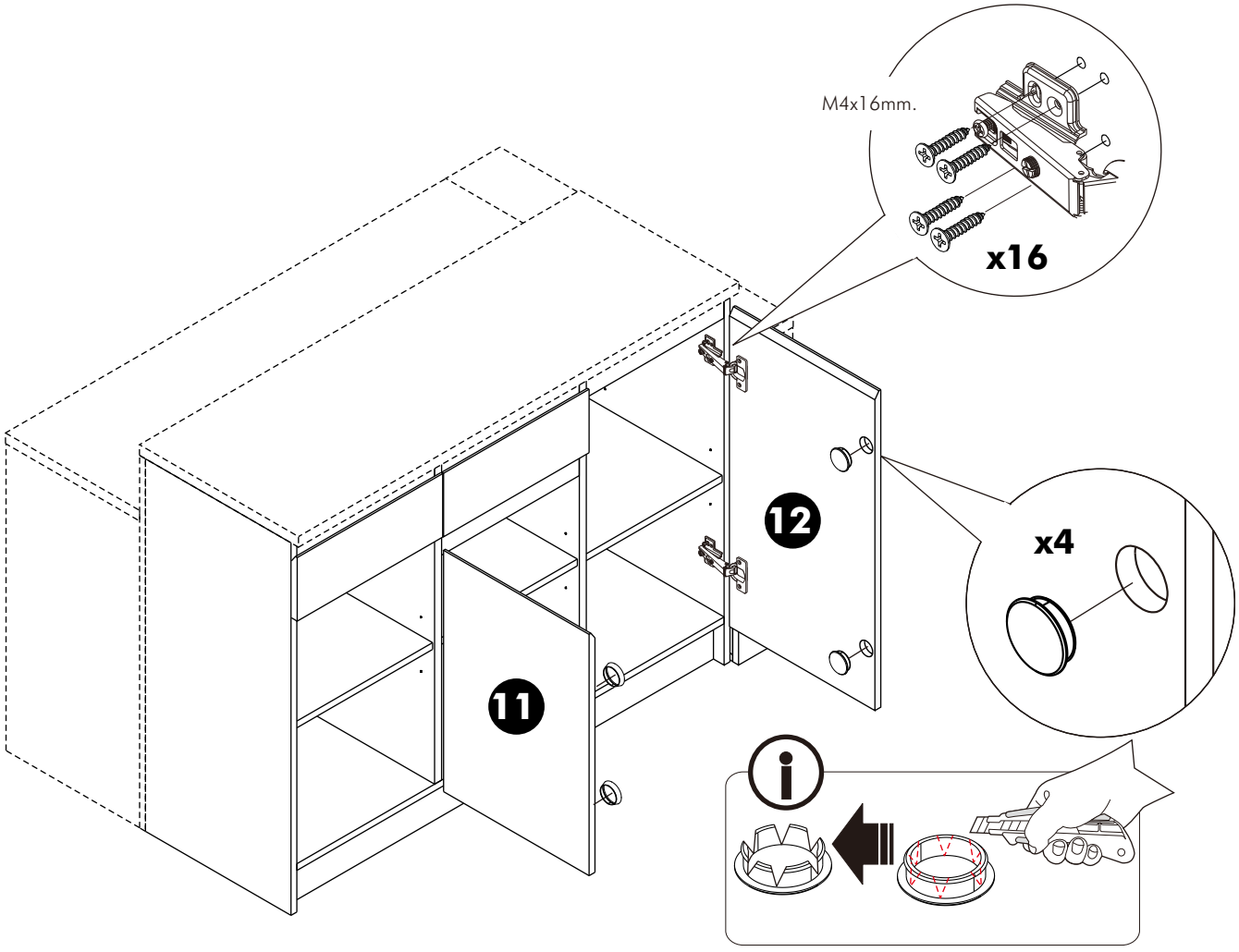

131126-2 190028412