TOP HPL

Countertop(TOP HPL 1.84)

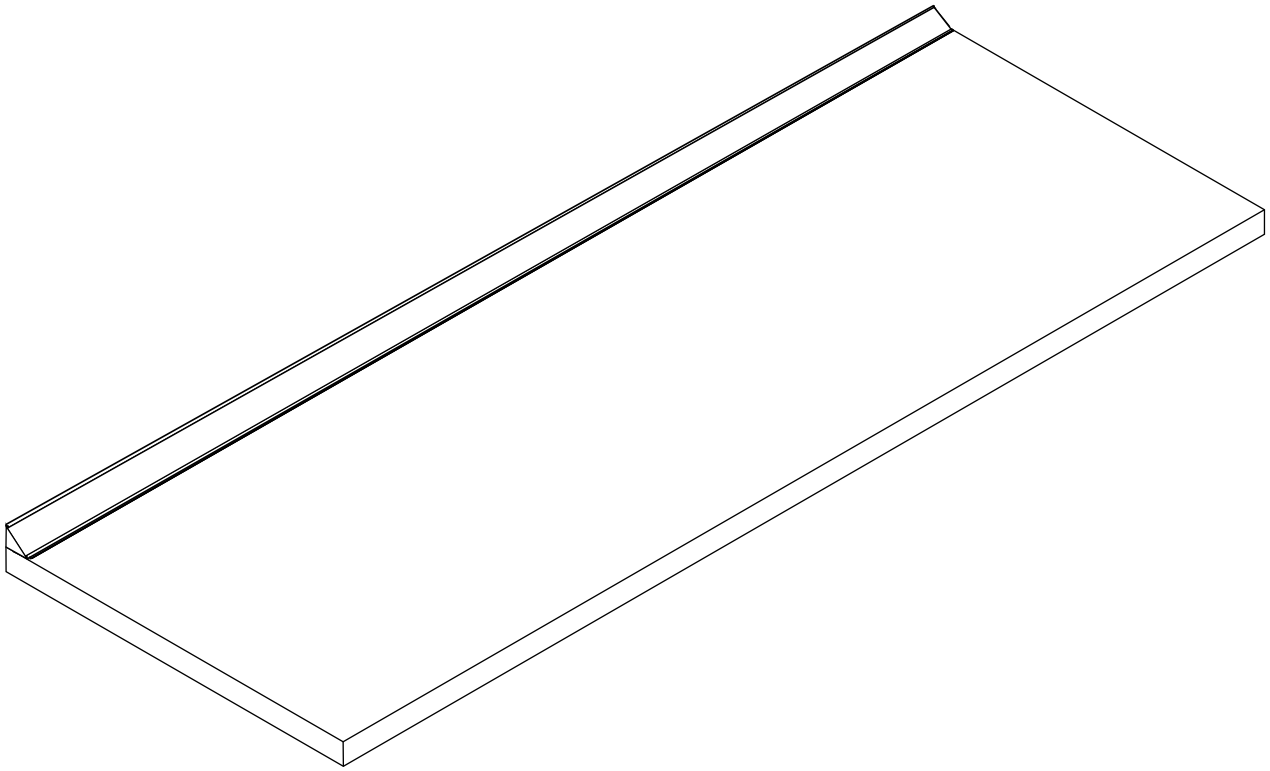

Indexlivingmall

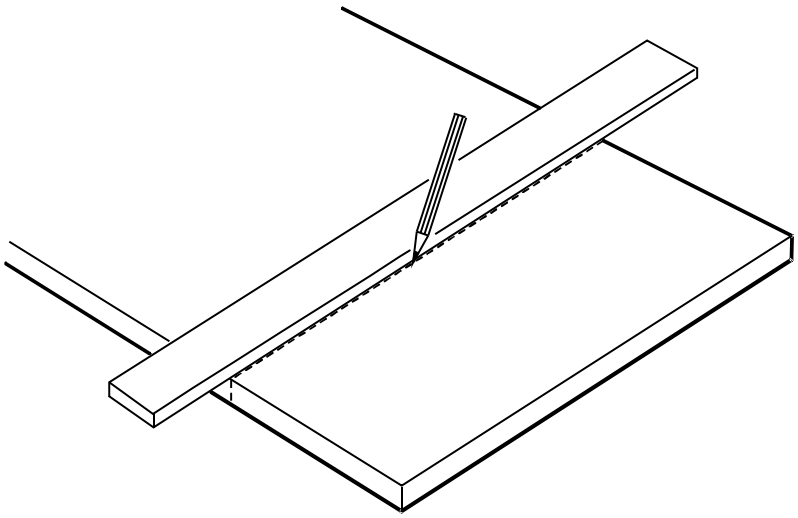

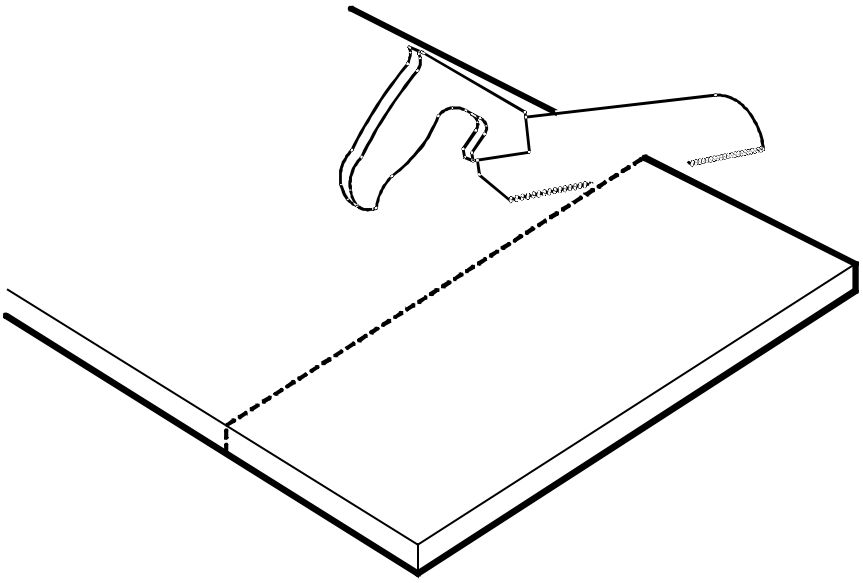

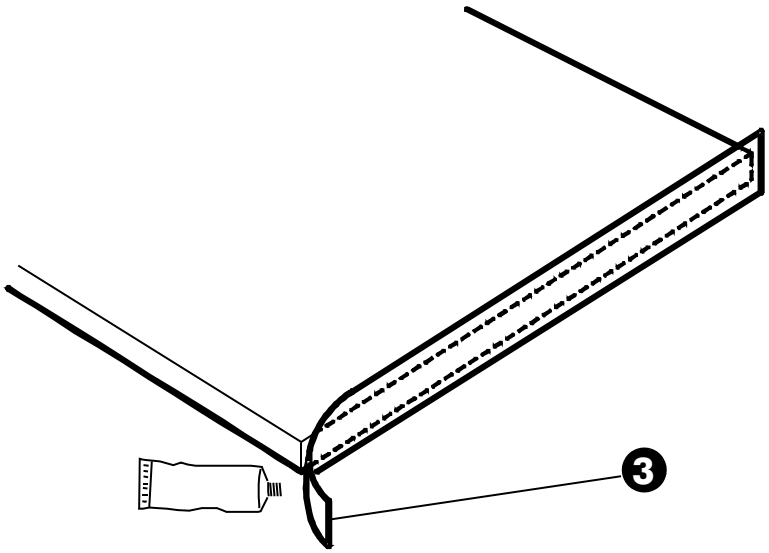
3

HARDWARE

M3.5x13mm.

x5

x2

x2

x4

x2

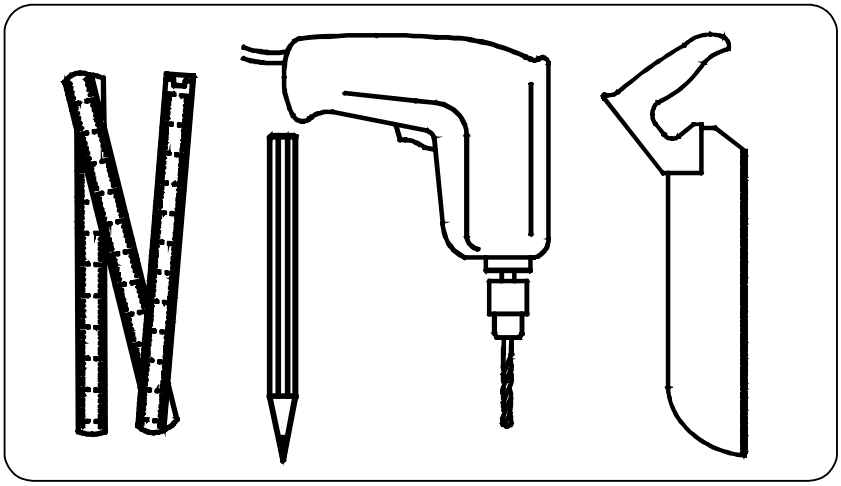

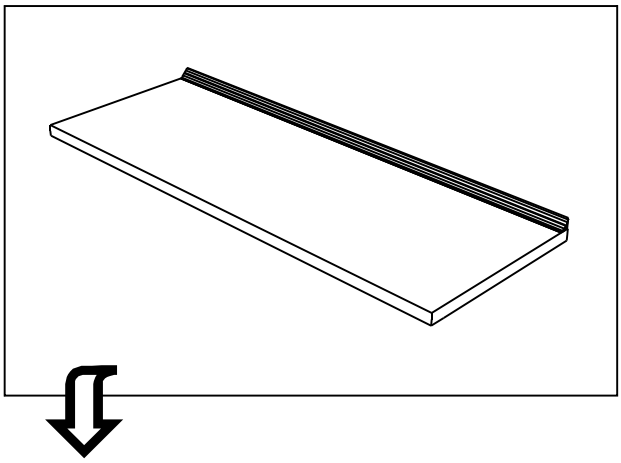

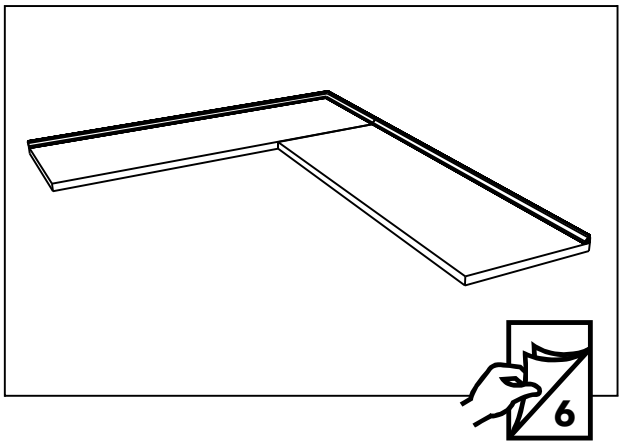

1.

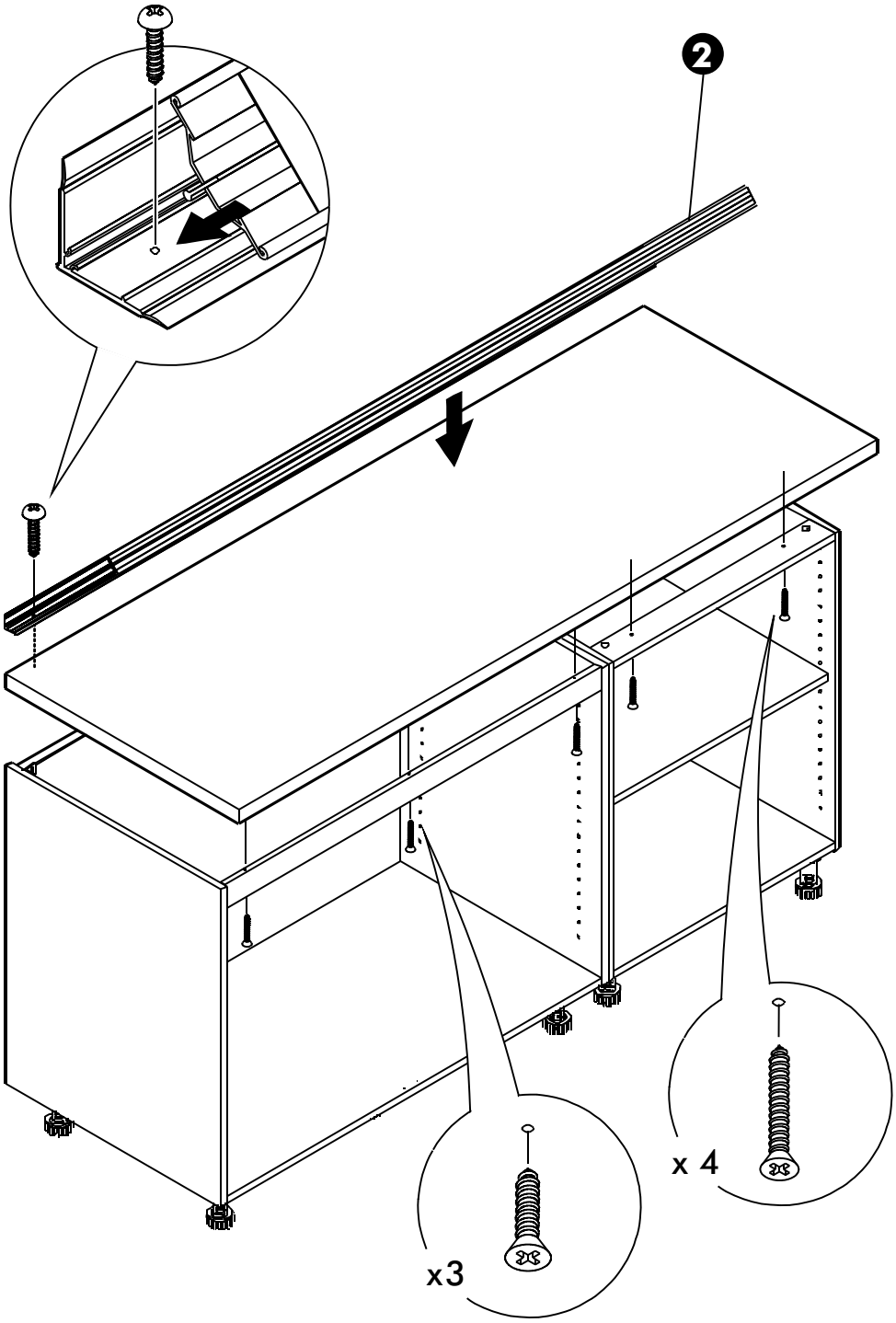

2.

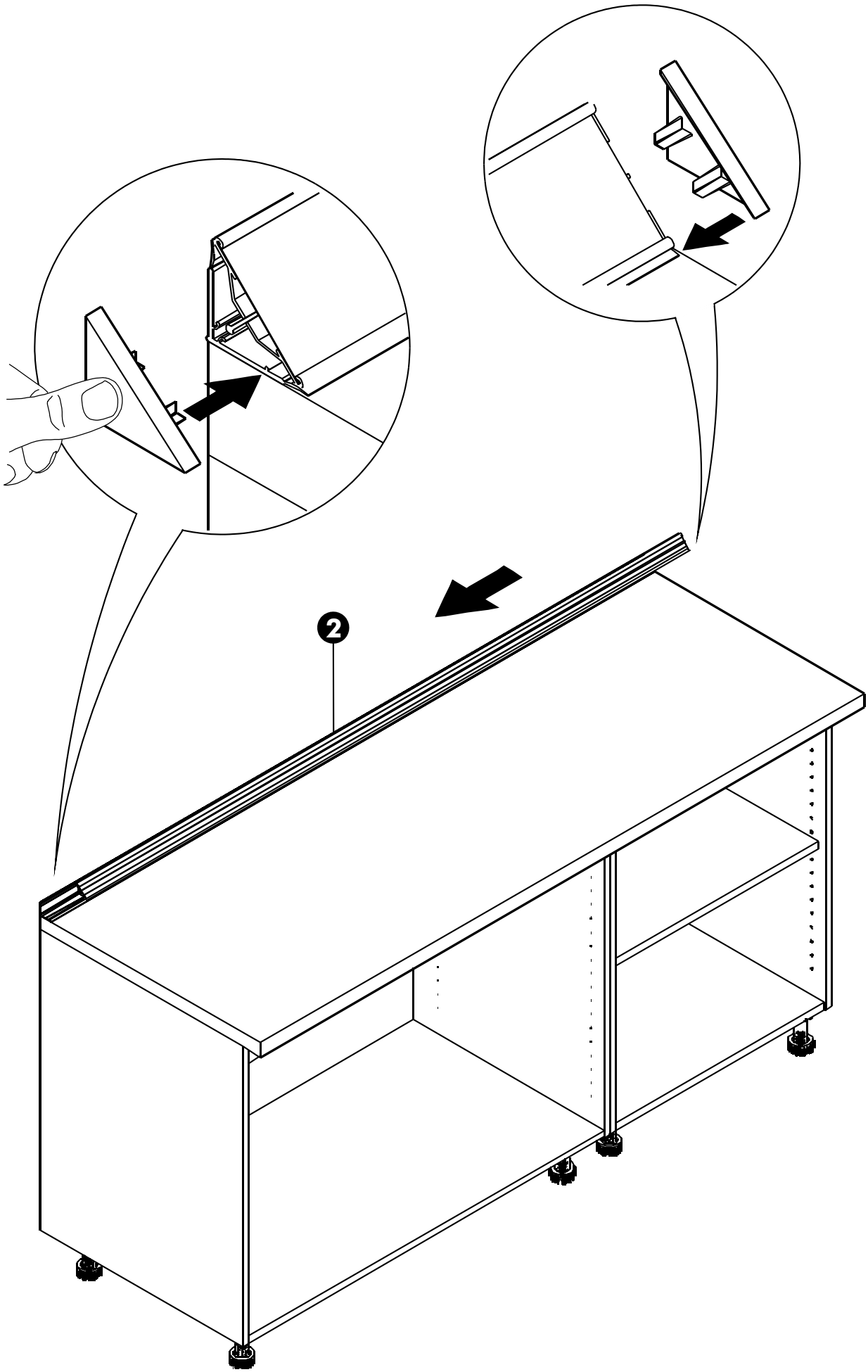

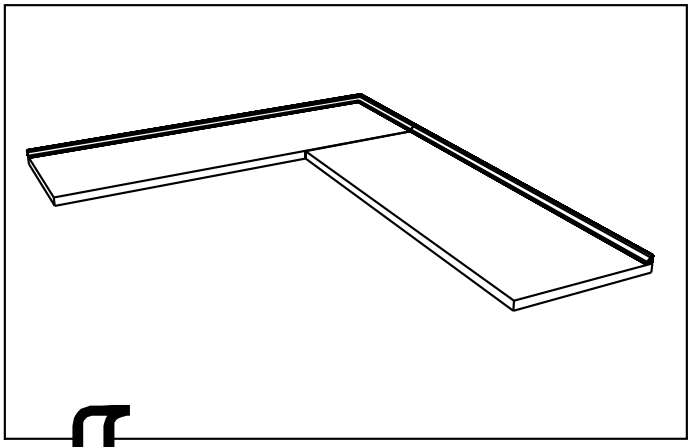

1.

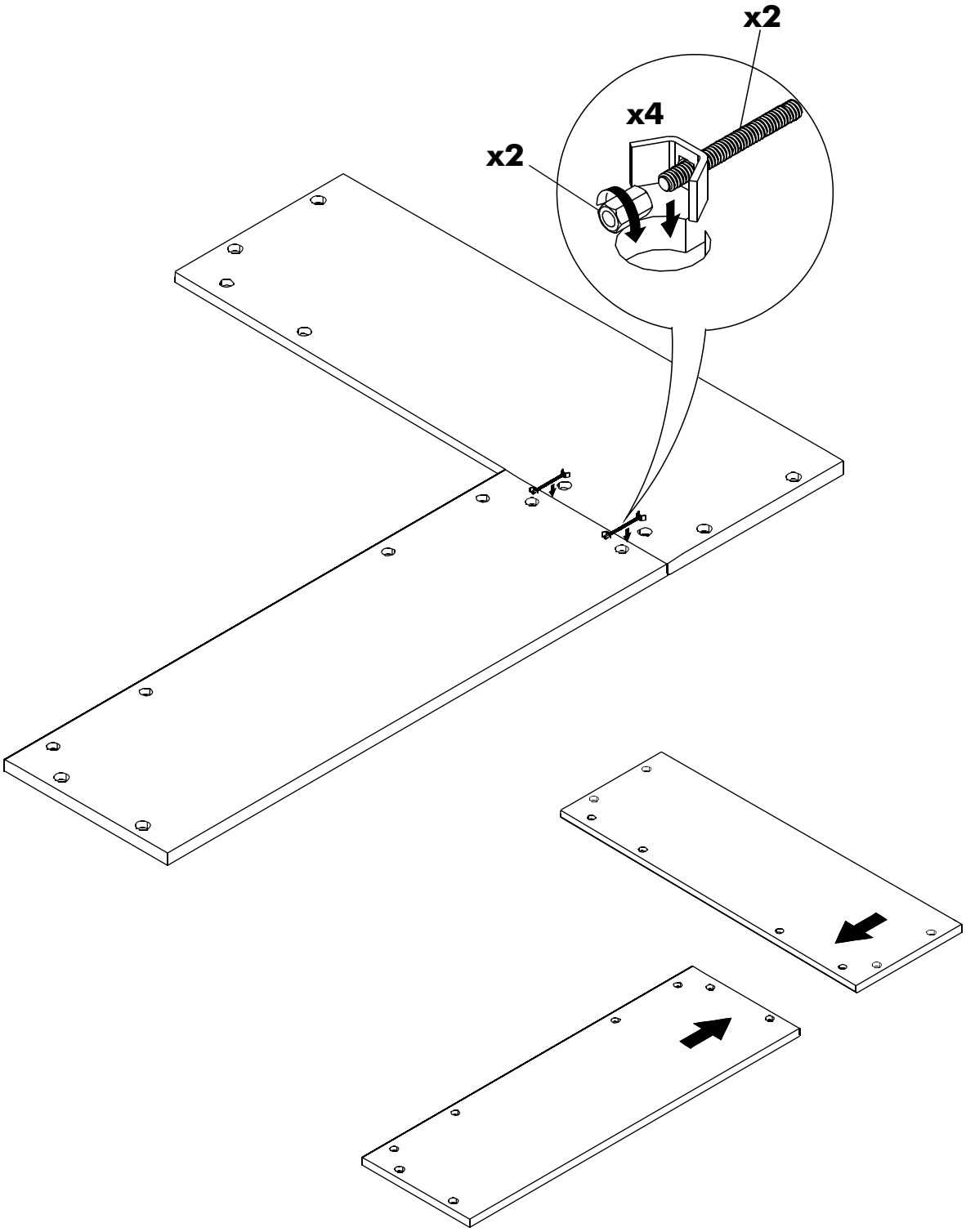

2.

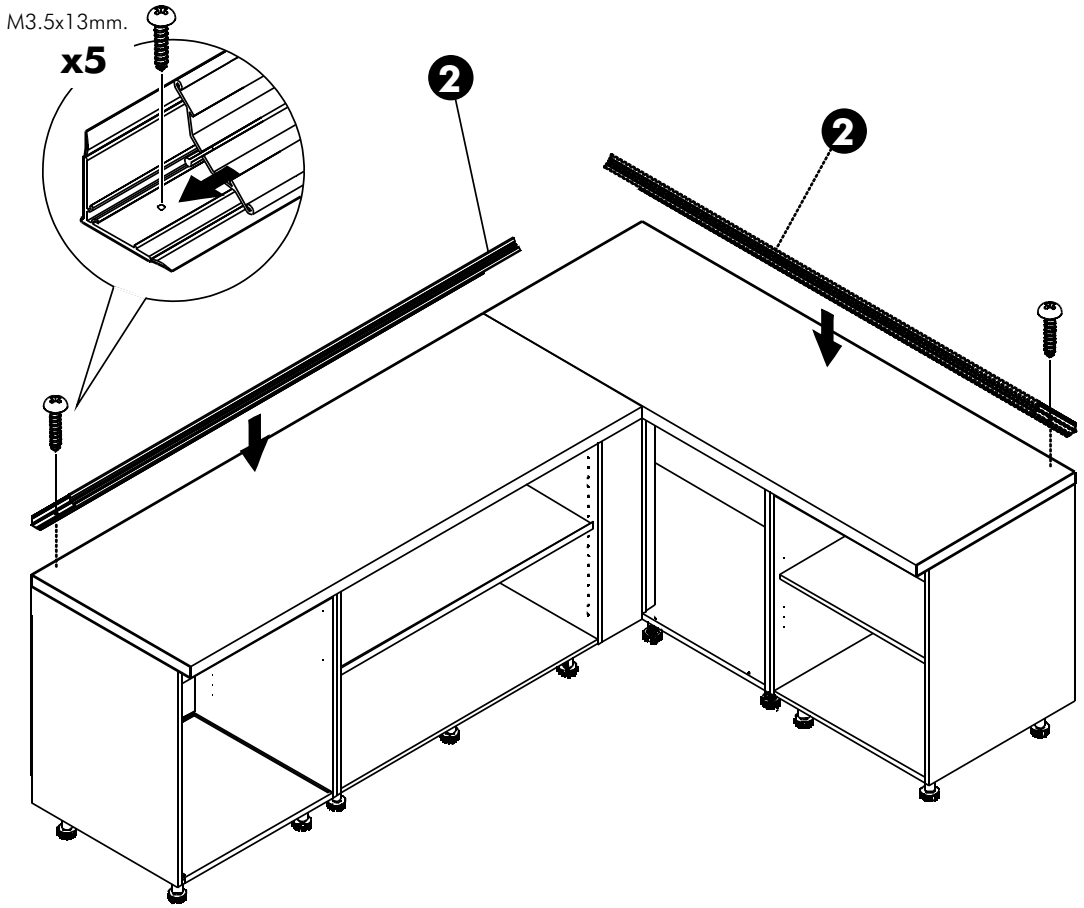

3.

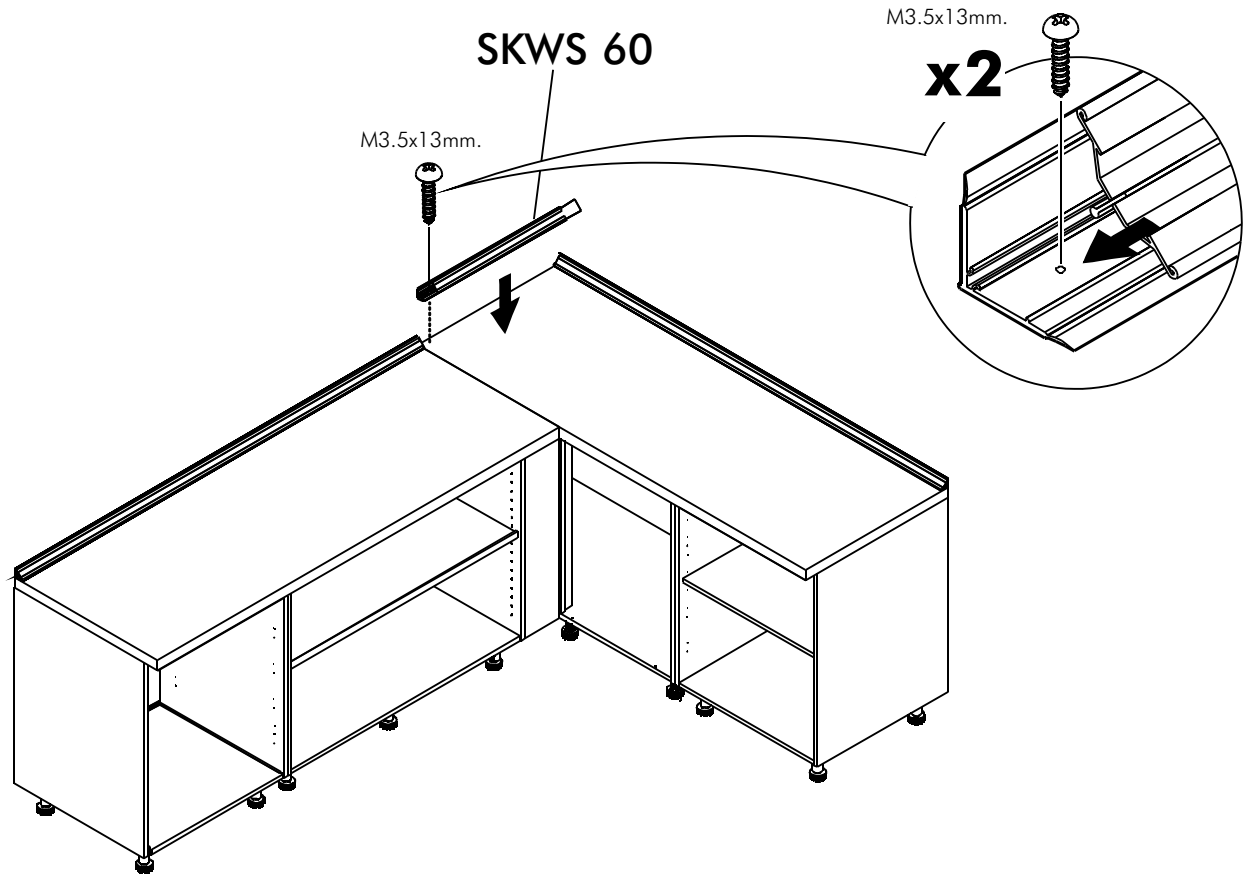

4.

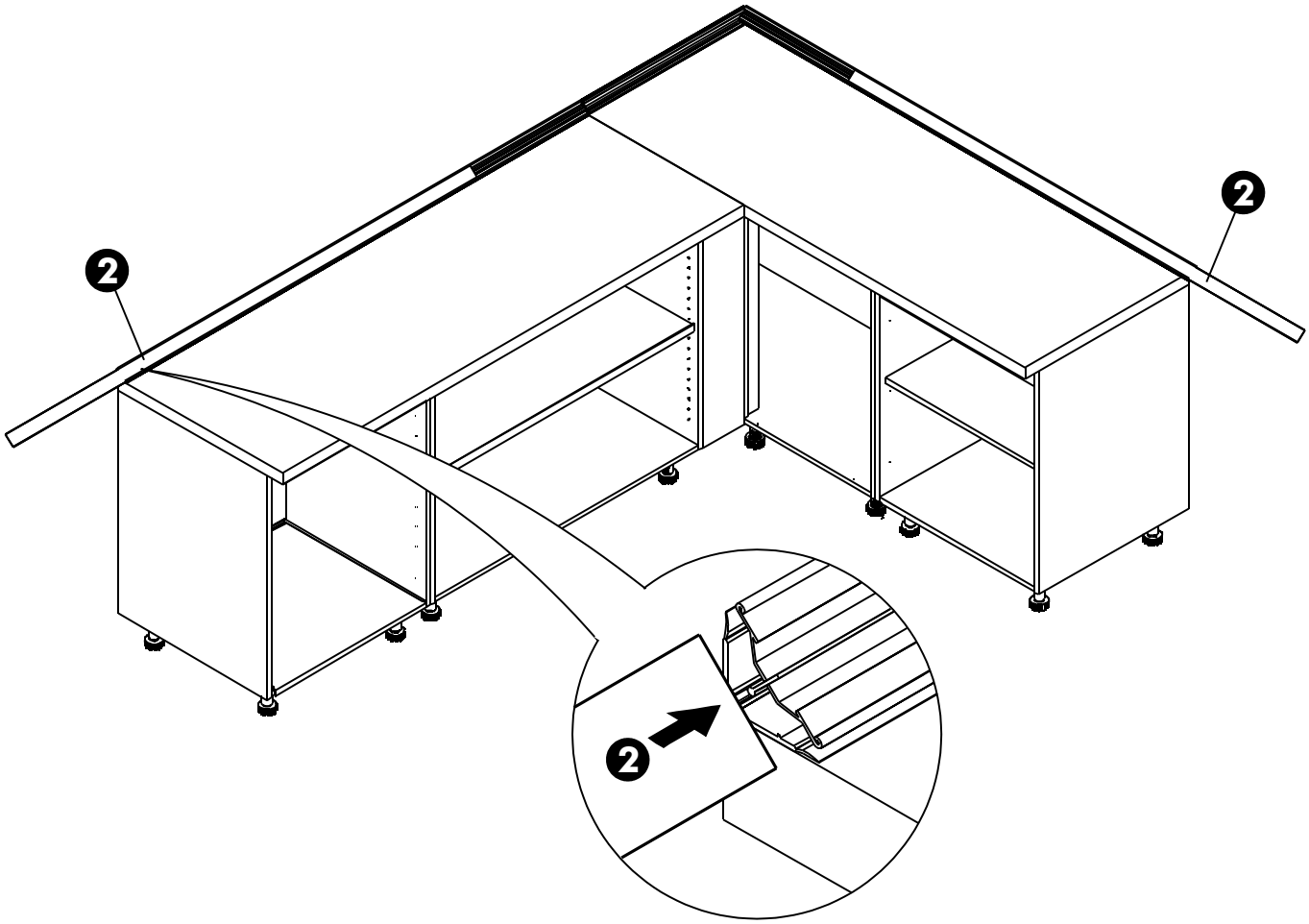
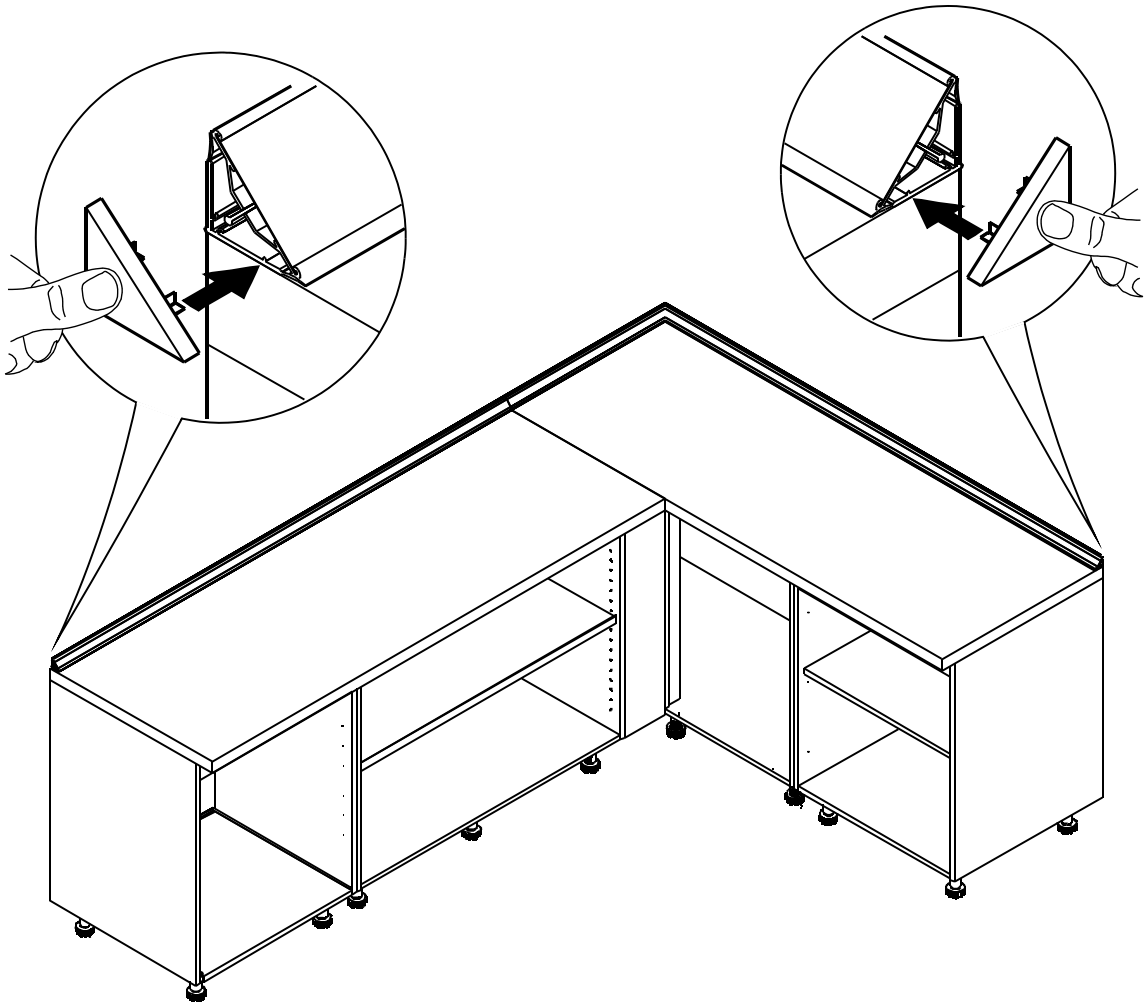
5.