BUILT-IN KITCHEN

Countertop

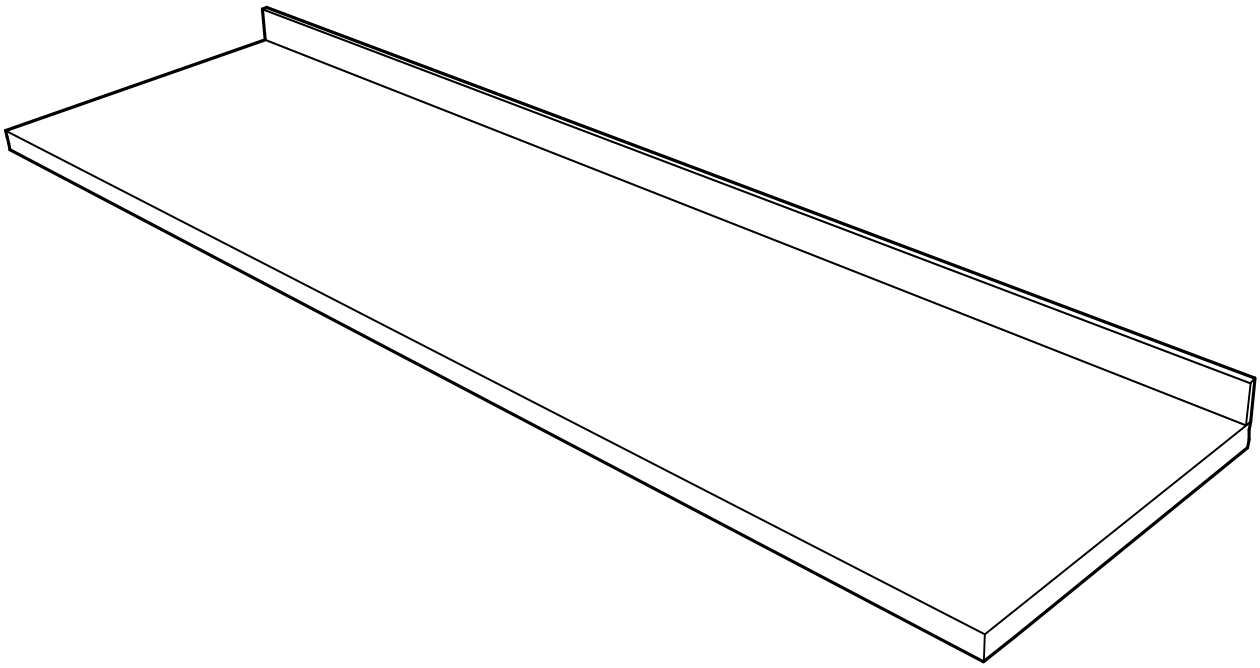

Indexlivingmall

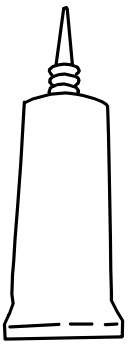

1.

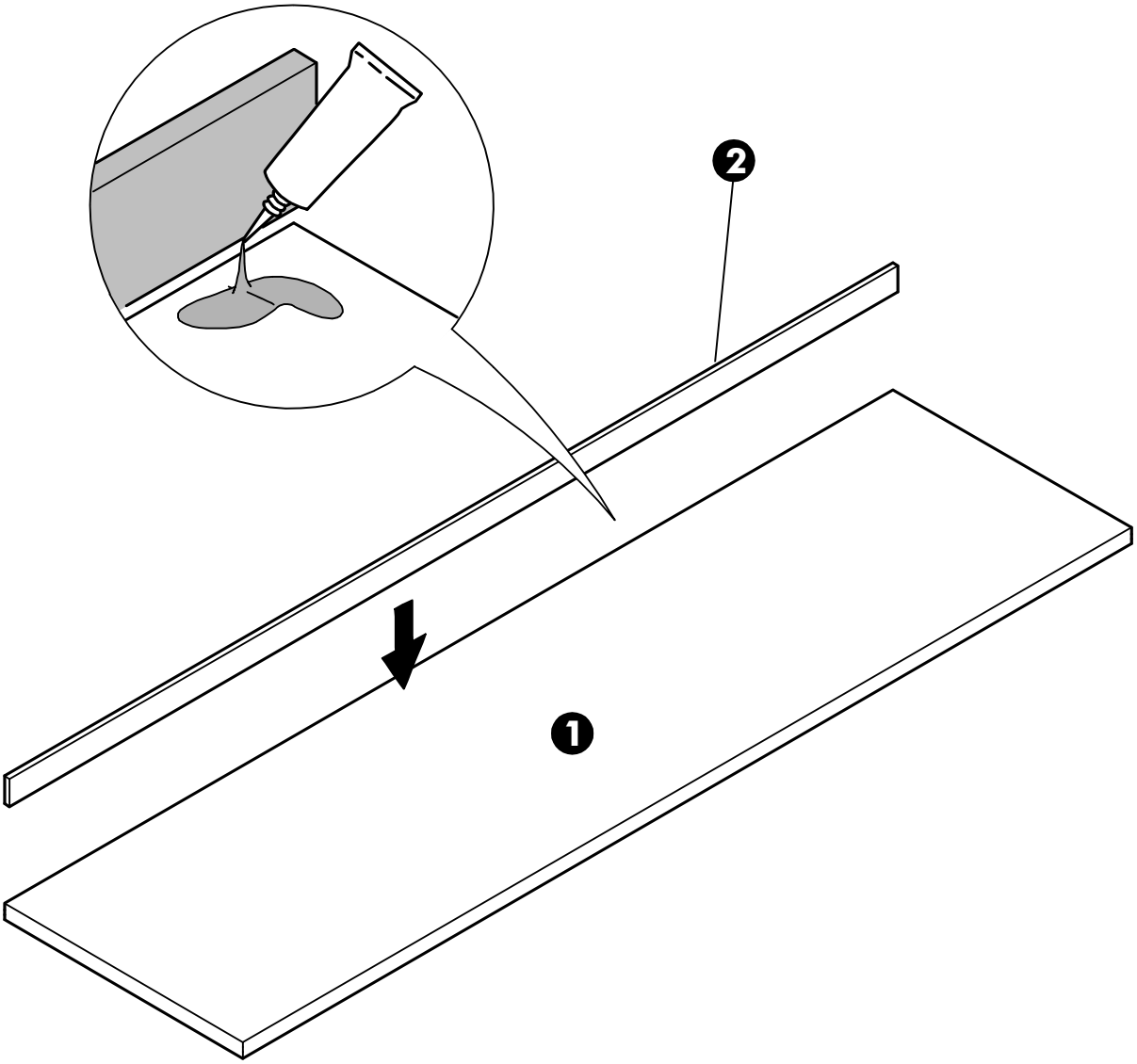

2.

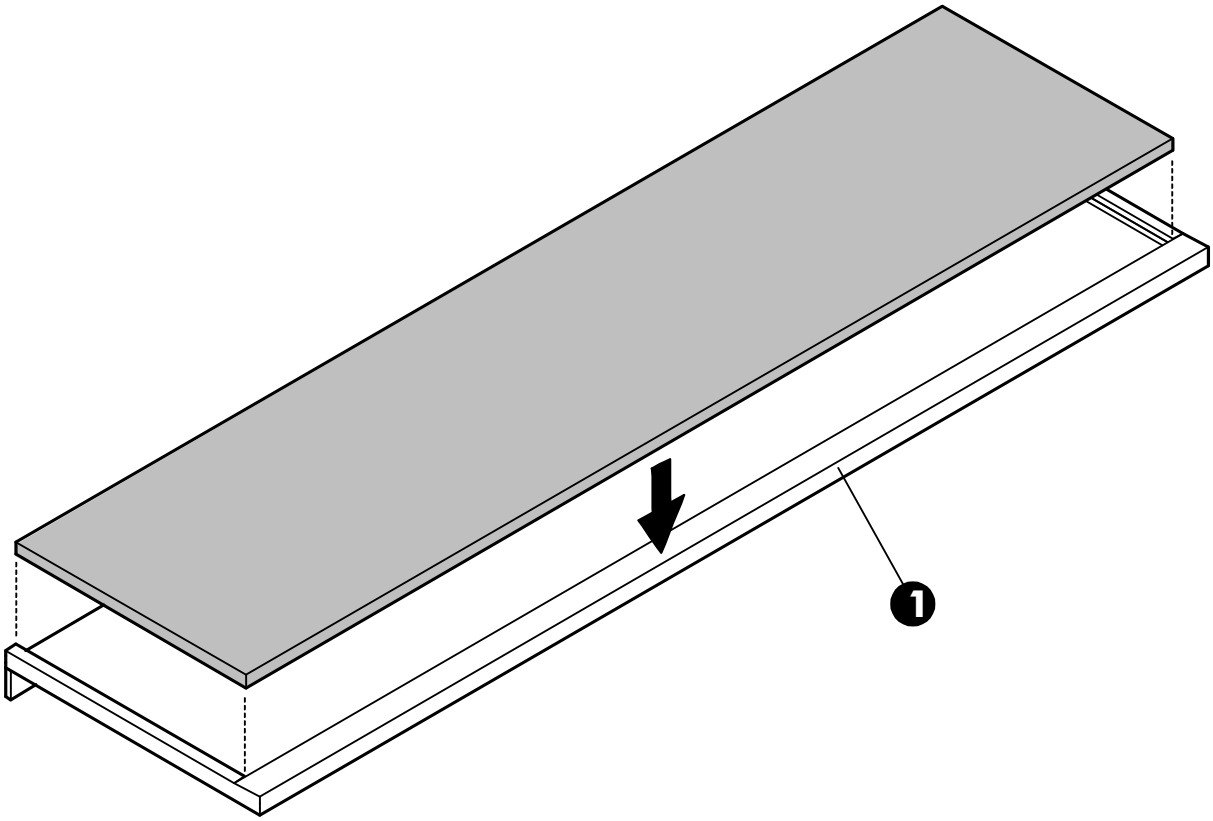
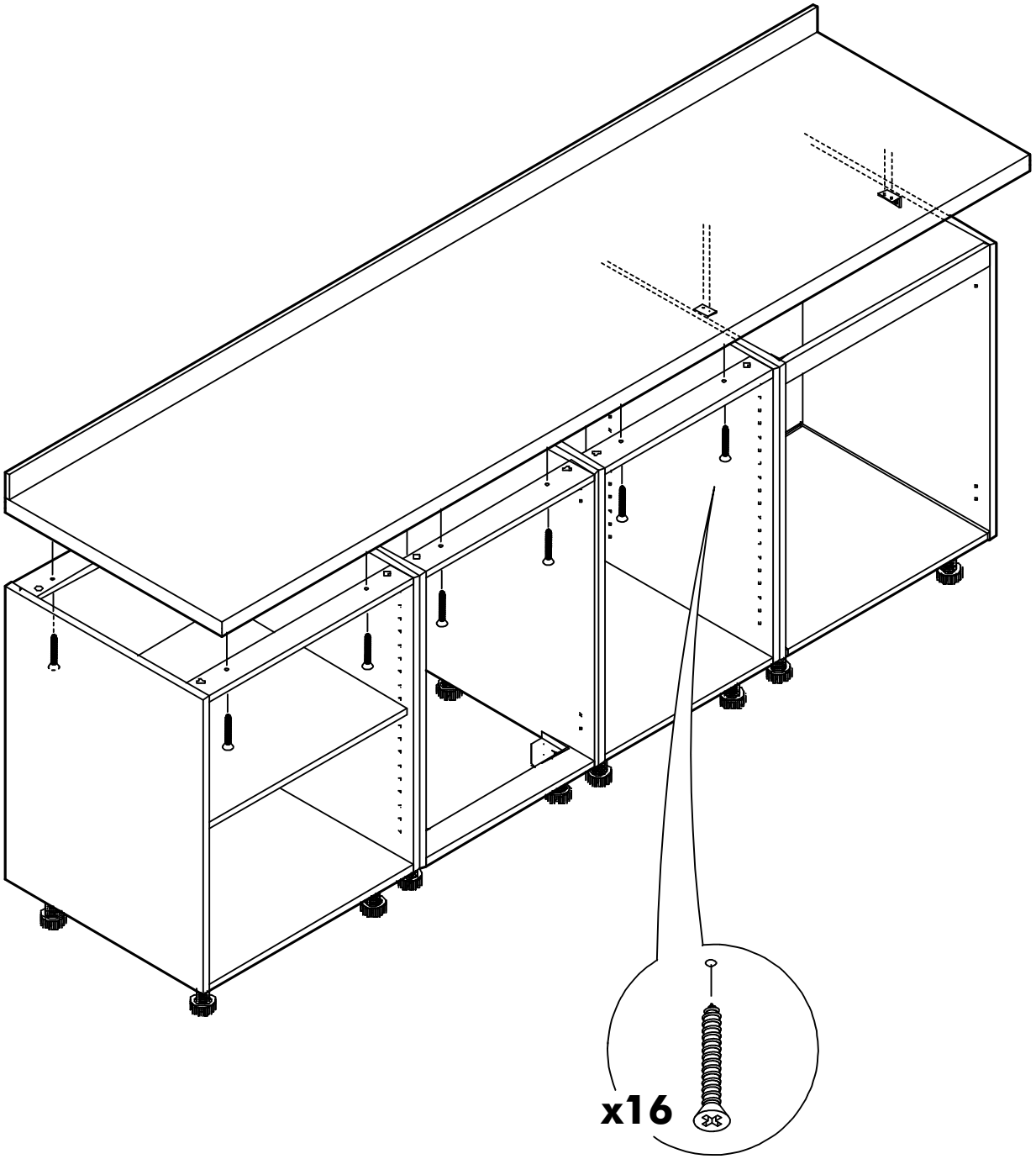
3.