(N524) Wardrobe
CHAPTER ONE CHULA SAMYAN

Assembly

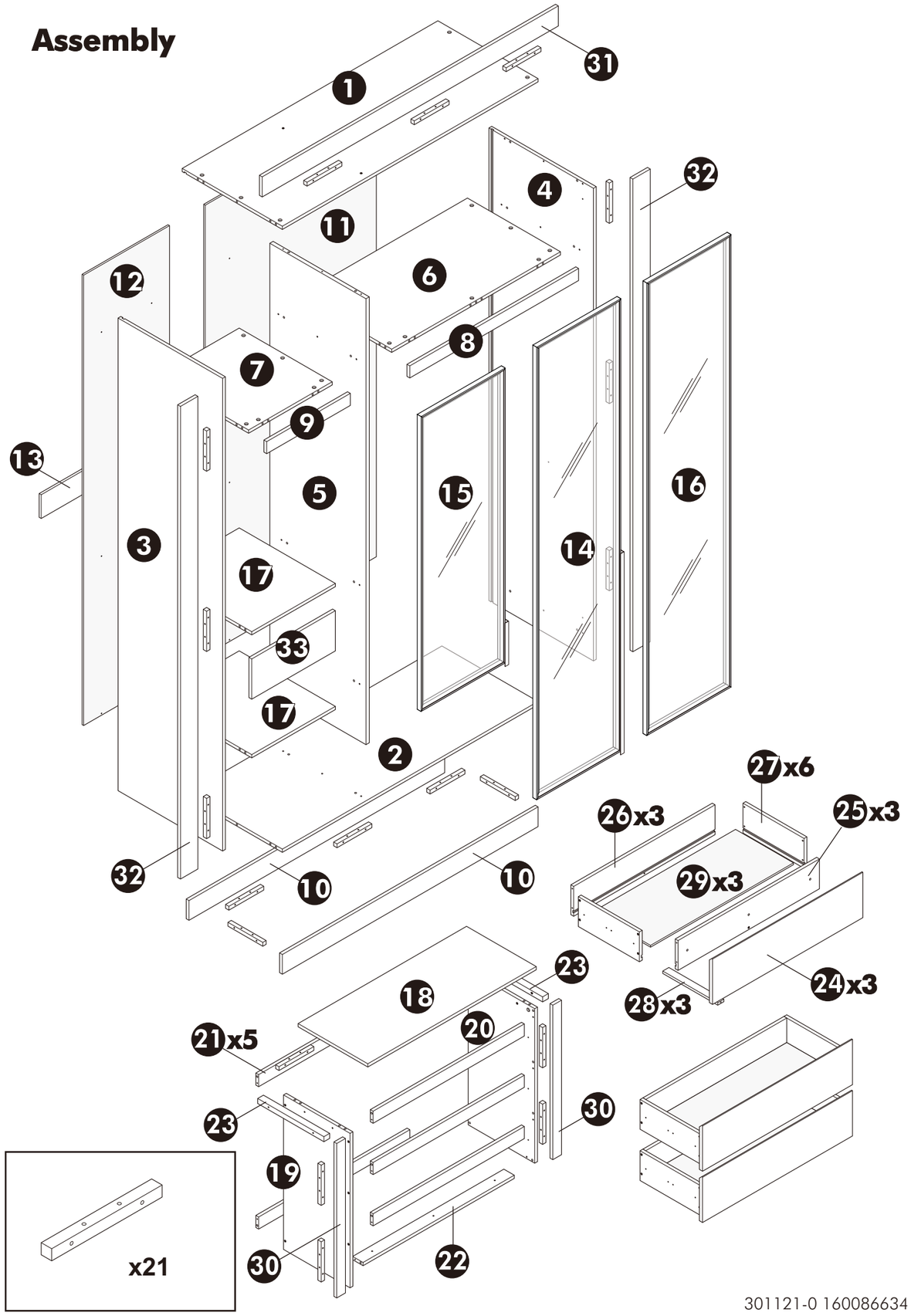

301121-0 160086634