H-VENISE-P

Wardrobe sliding 120 cm.

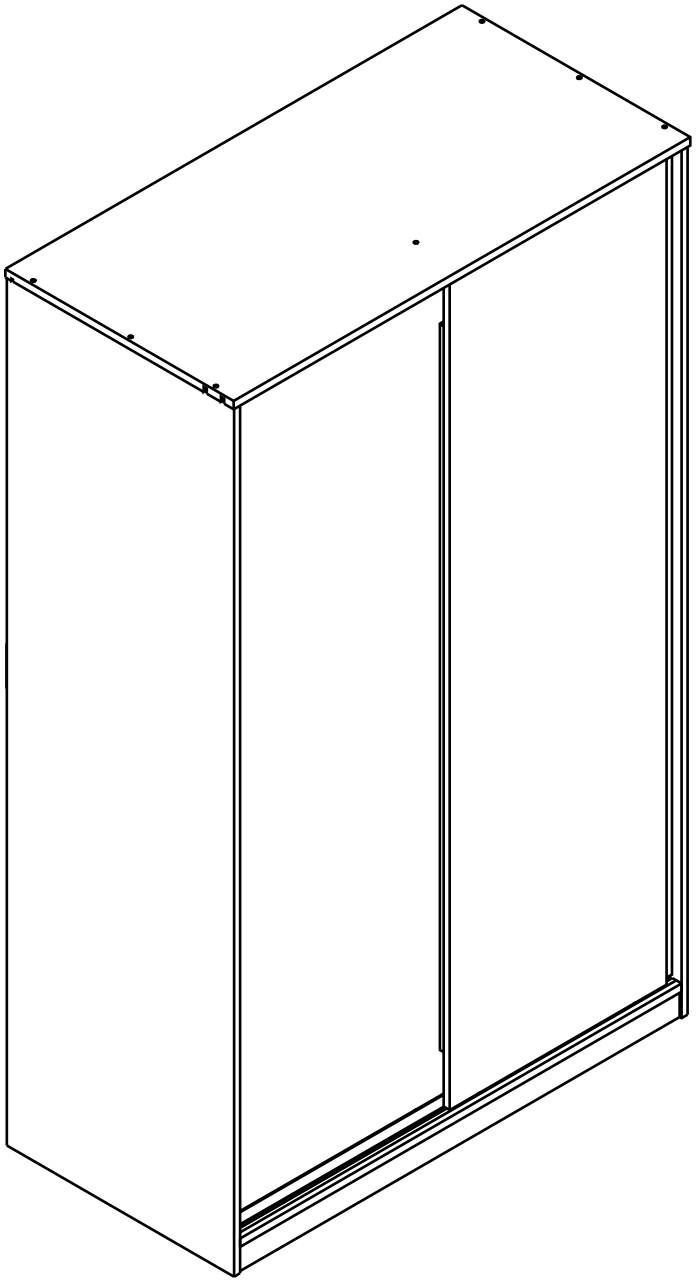

Indexlivingmall

CONNECT SYSTEM

1

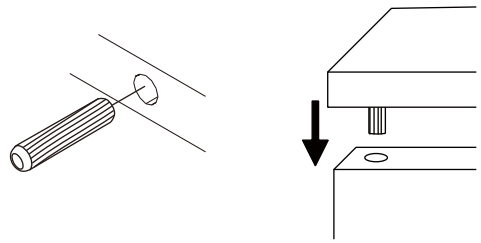

2

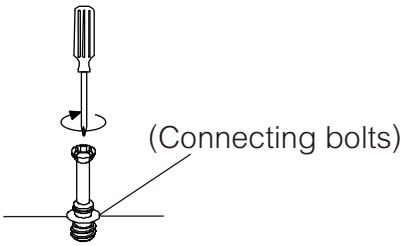

3

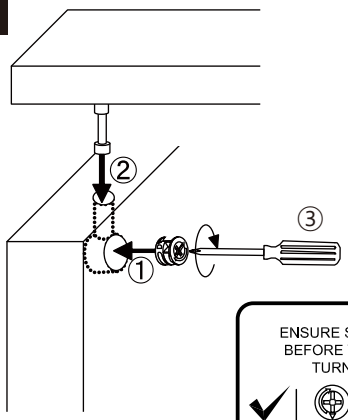

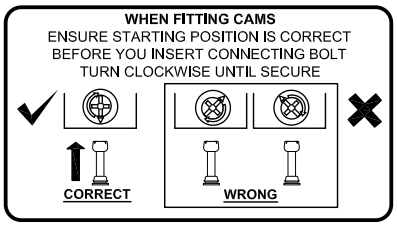

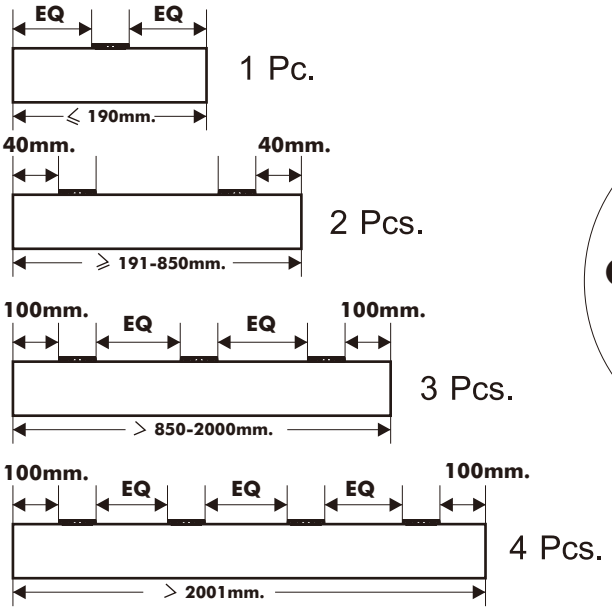

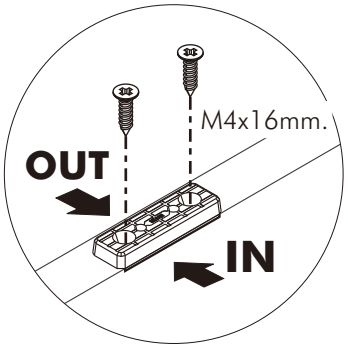

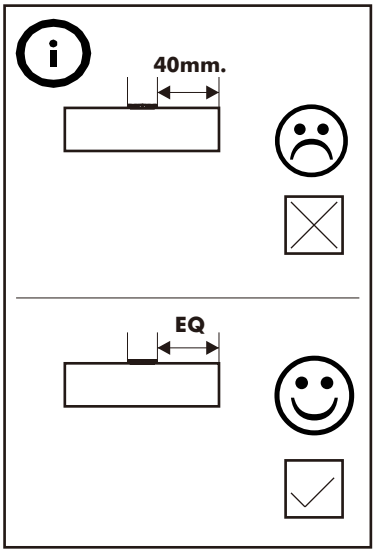

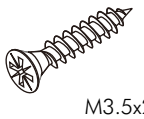

M3.5x20mm.

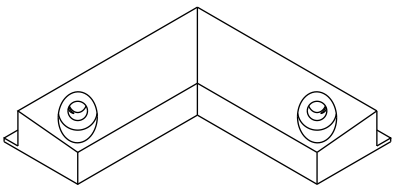

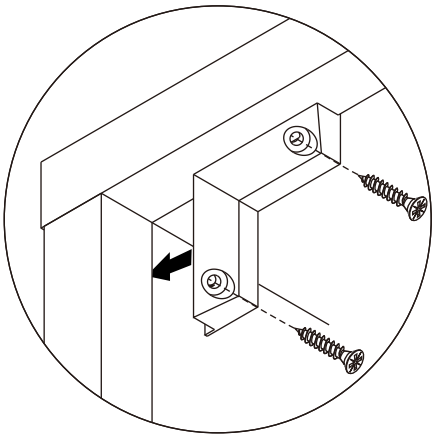

HARDWARE

-BODY SET

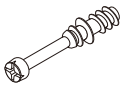

x 13



x 13

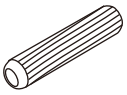

(8x35)

x 26



M4x50mm.

x 10



#M3.5x20(F)

x 4



M4x16(P)

x 28

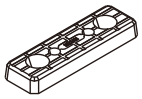

x 11

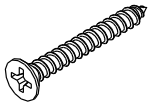

M4x30(F)

x 30

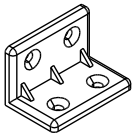

x 11



M4x16mm.

x 90



M3.5x13(F)

x 8

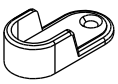

x 4

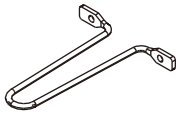

x 1

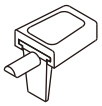

x 4



M4x40mm.

x 4



x 4

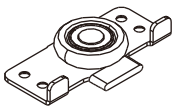

x 4

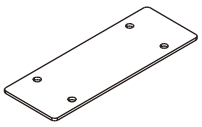

x 2

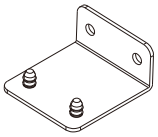

x 2

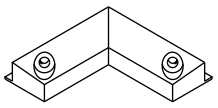

X 2

ASSEMBLY

-BODY SET

1.

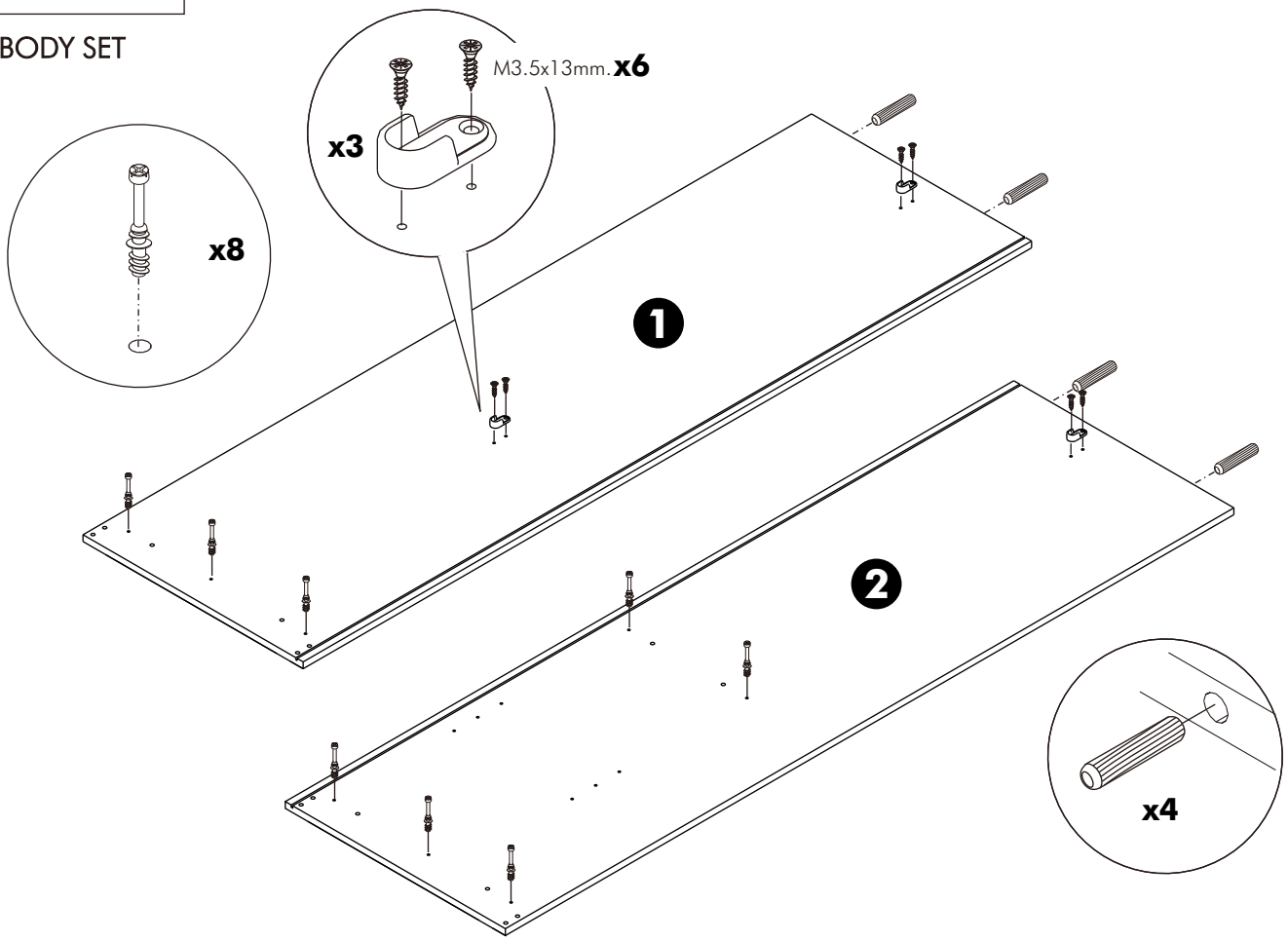

2.

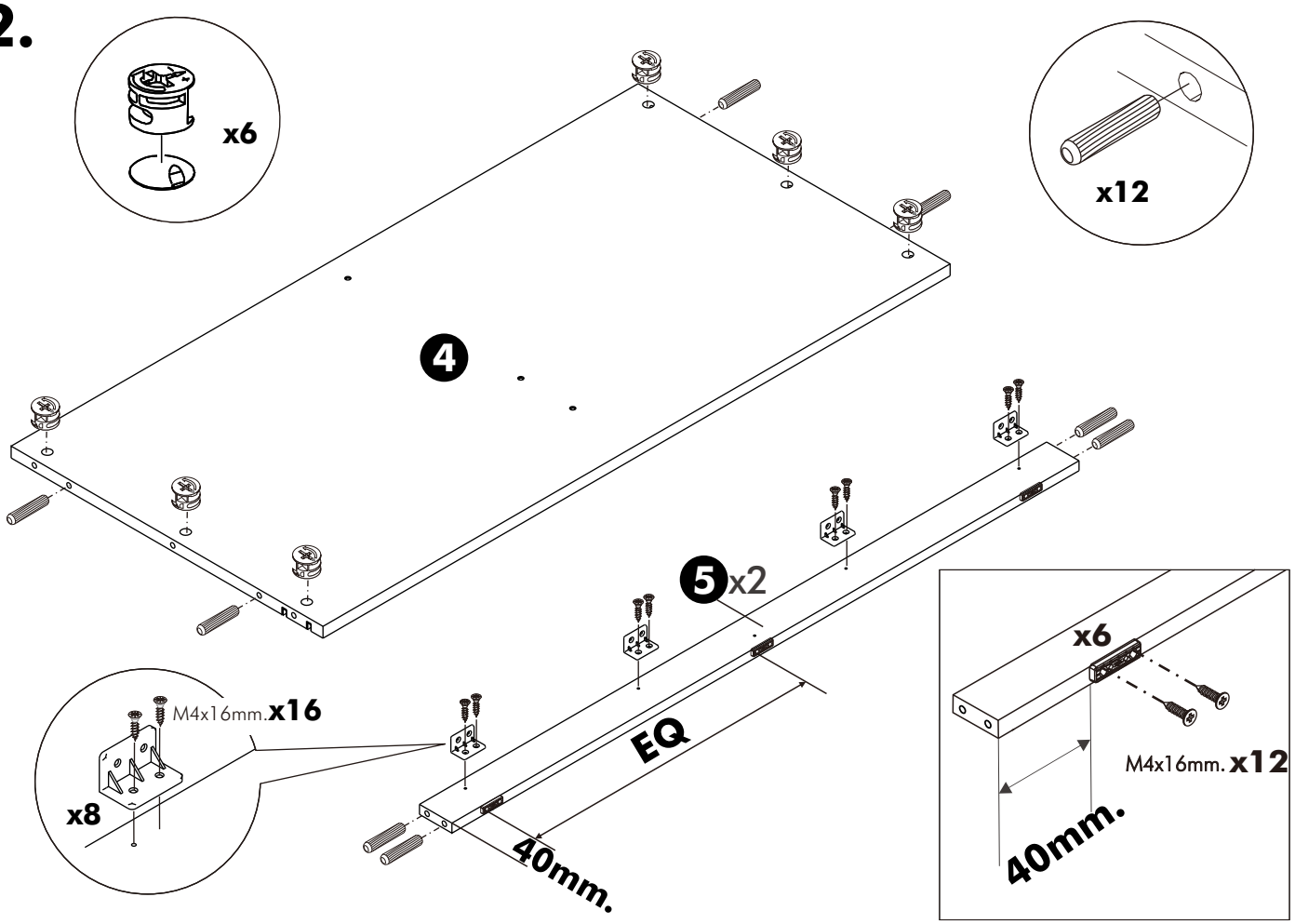

3.

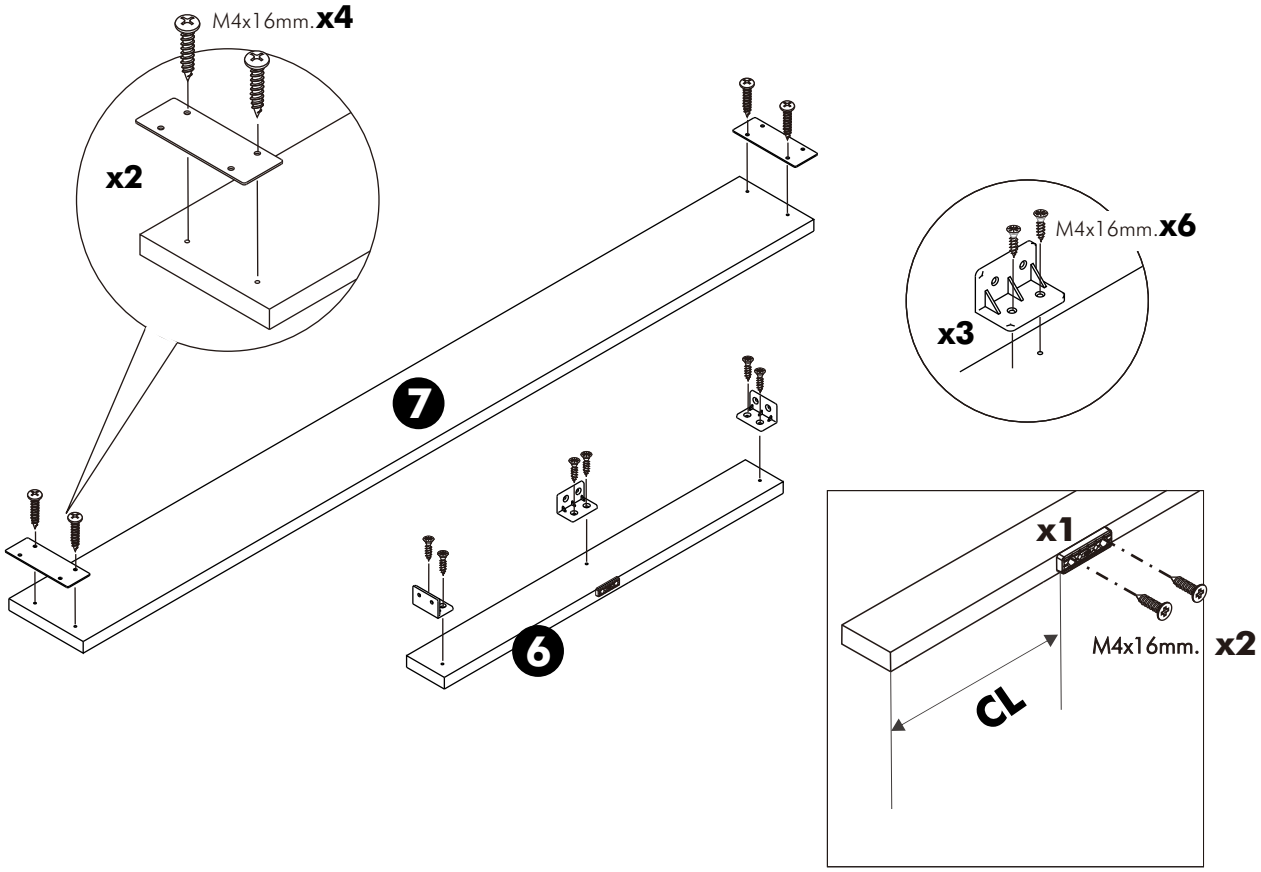
M4x16mm.x4
x2
7
6
M4x16mm.x6
x3
x1
M4x16mm. x2
CL

4.

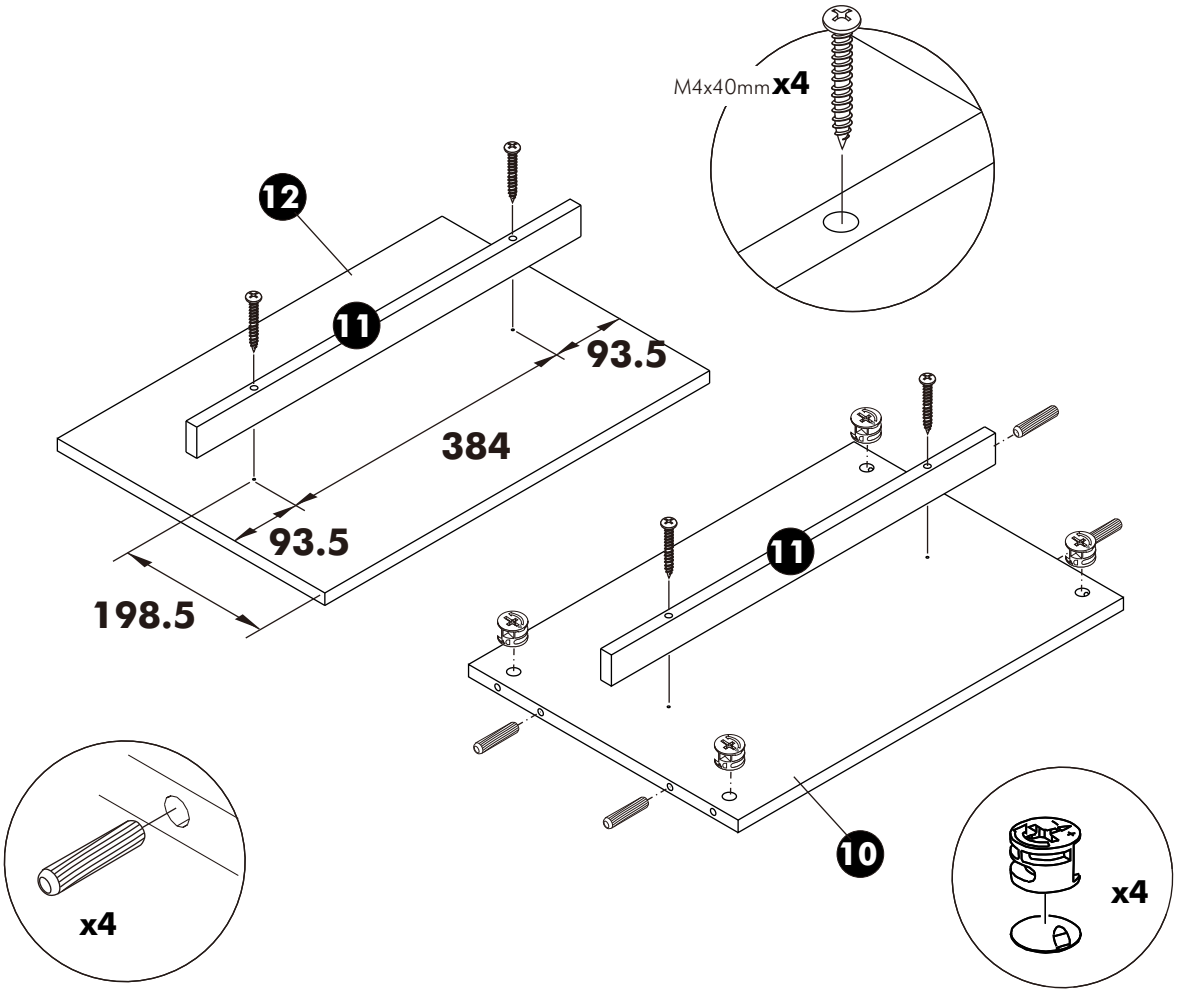
M4x40mmx4
12
11
93.5
384
93.5
198.5
11
10
x4
x4

5.

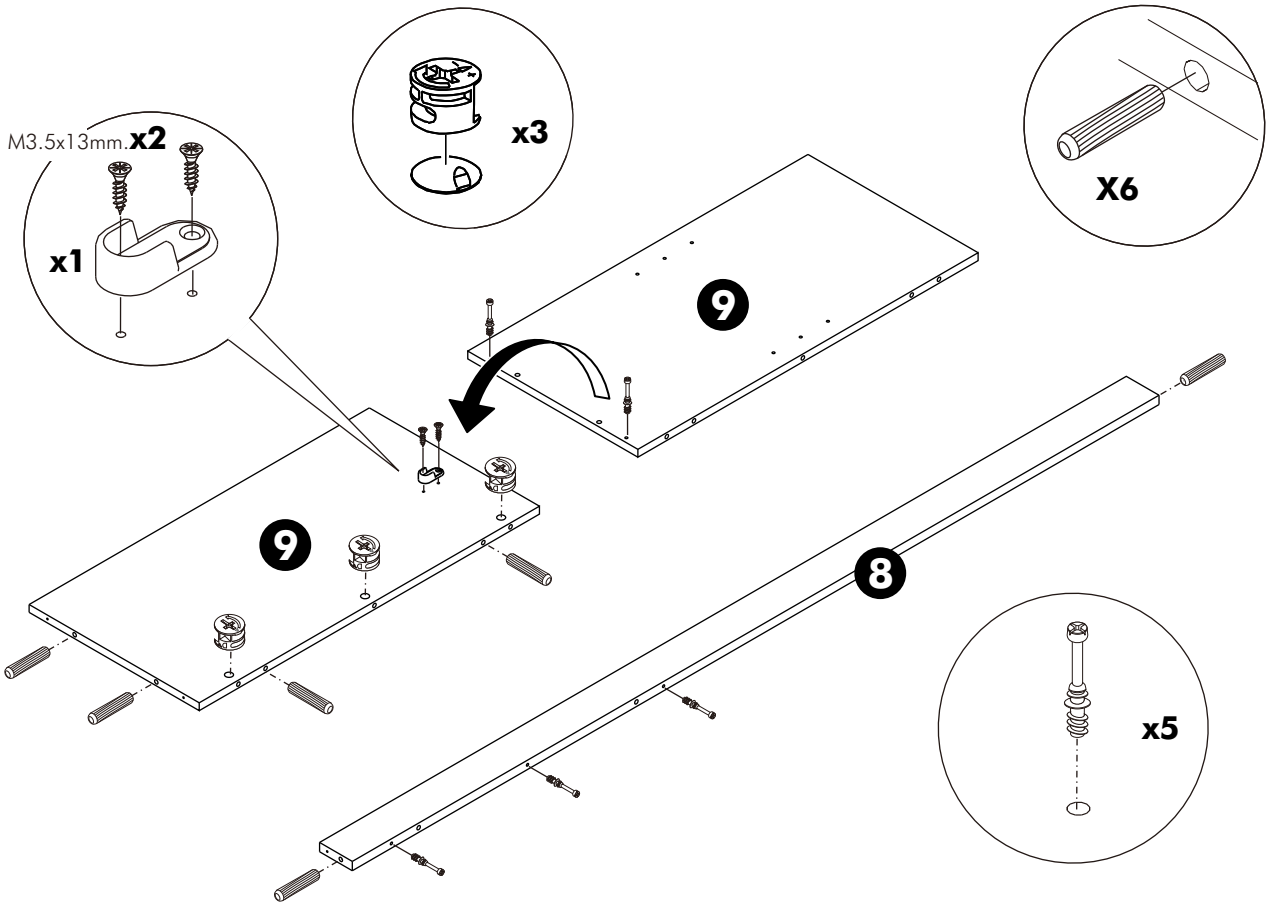

6.

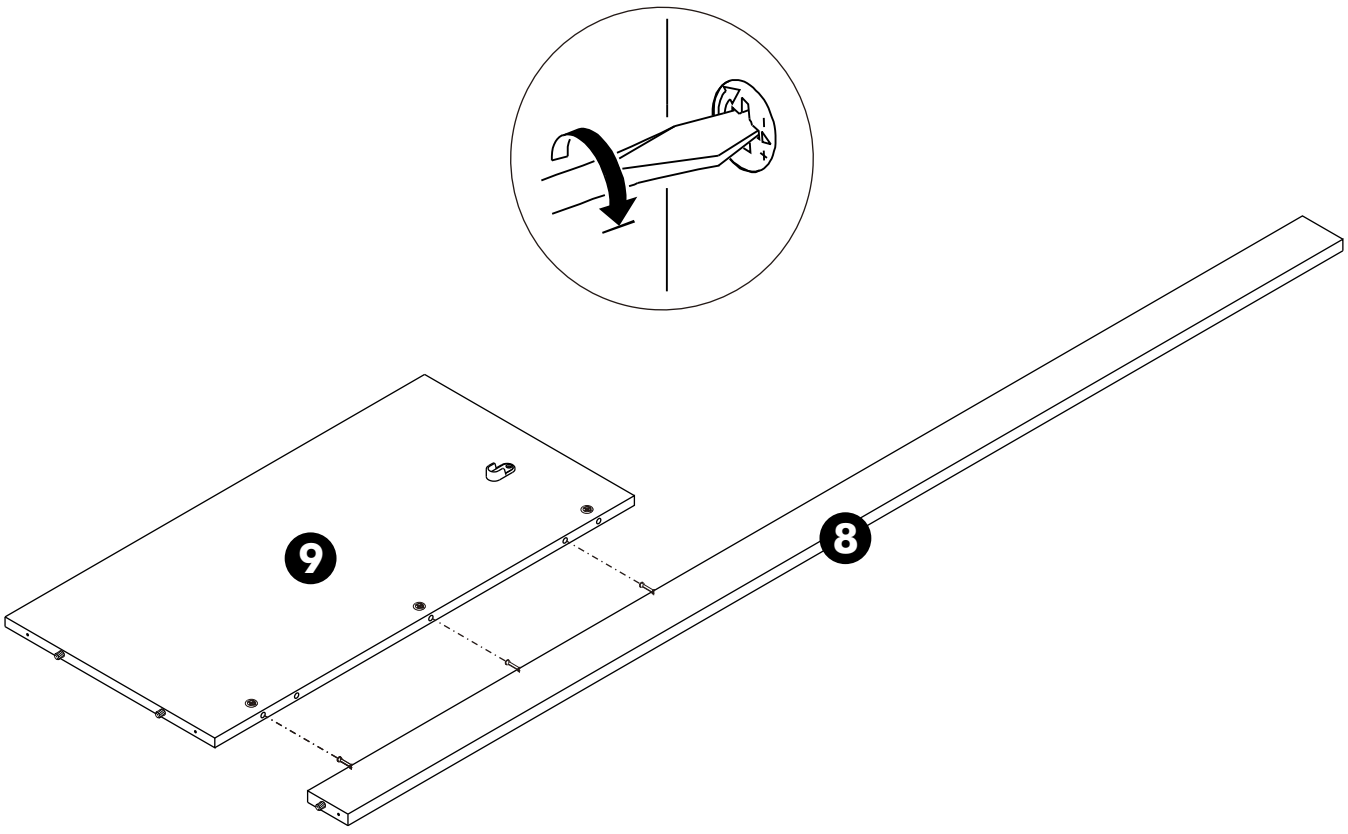

7.

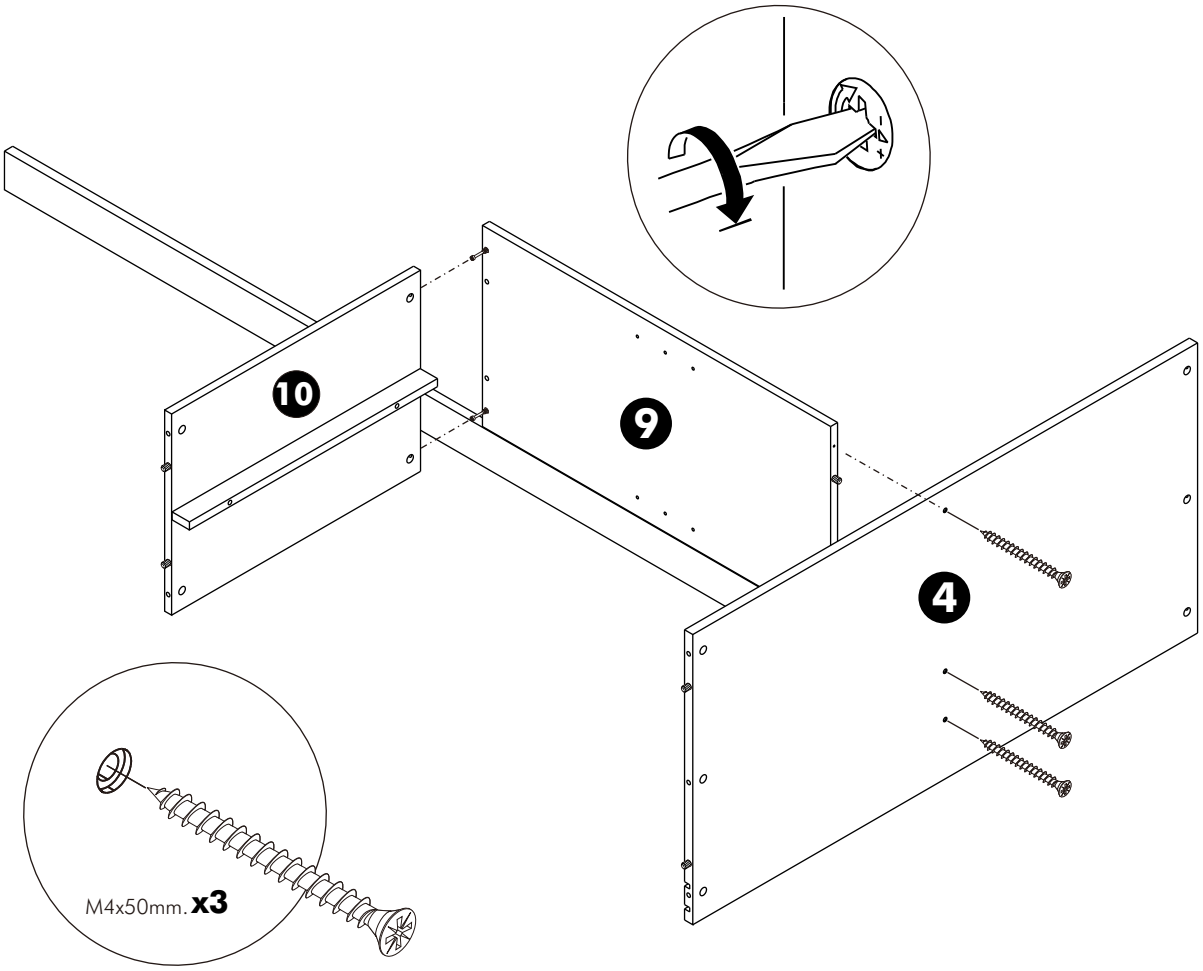

8.

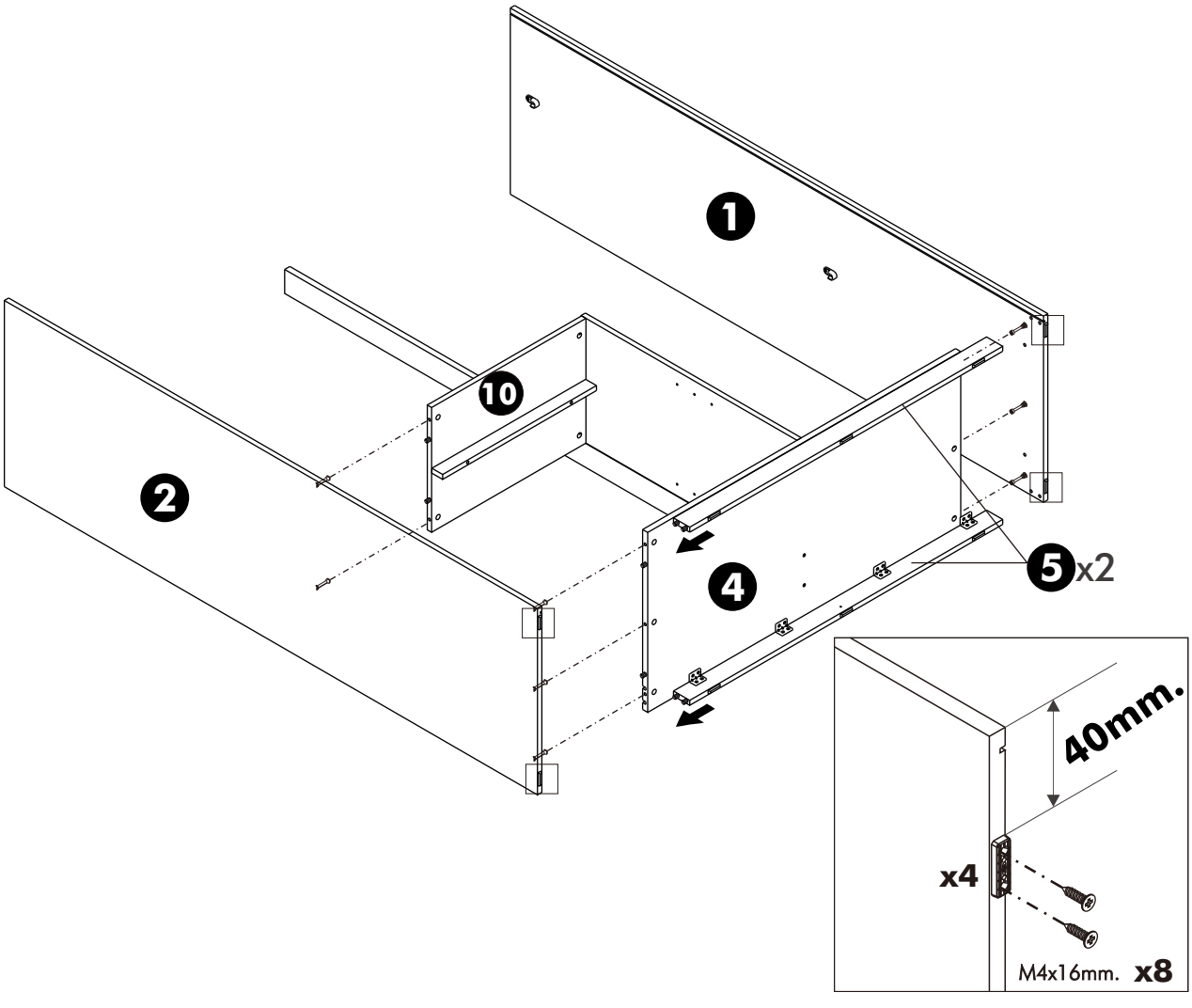

9.

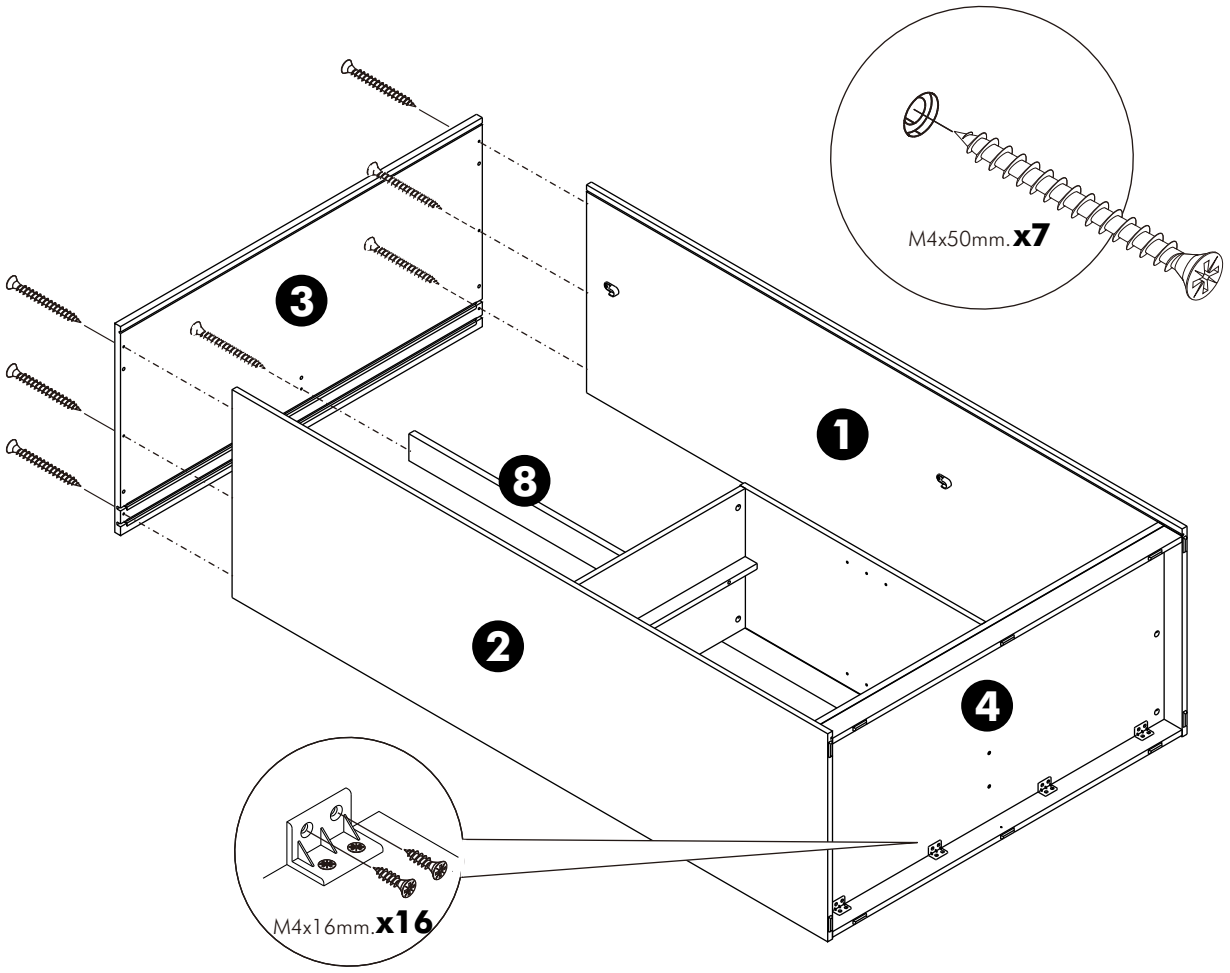
M4x50mm. x7
3
1
8
2
4
M4x16mm. x16

10.

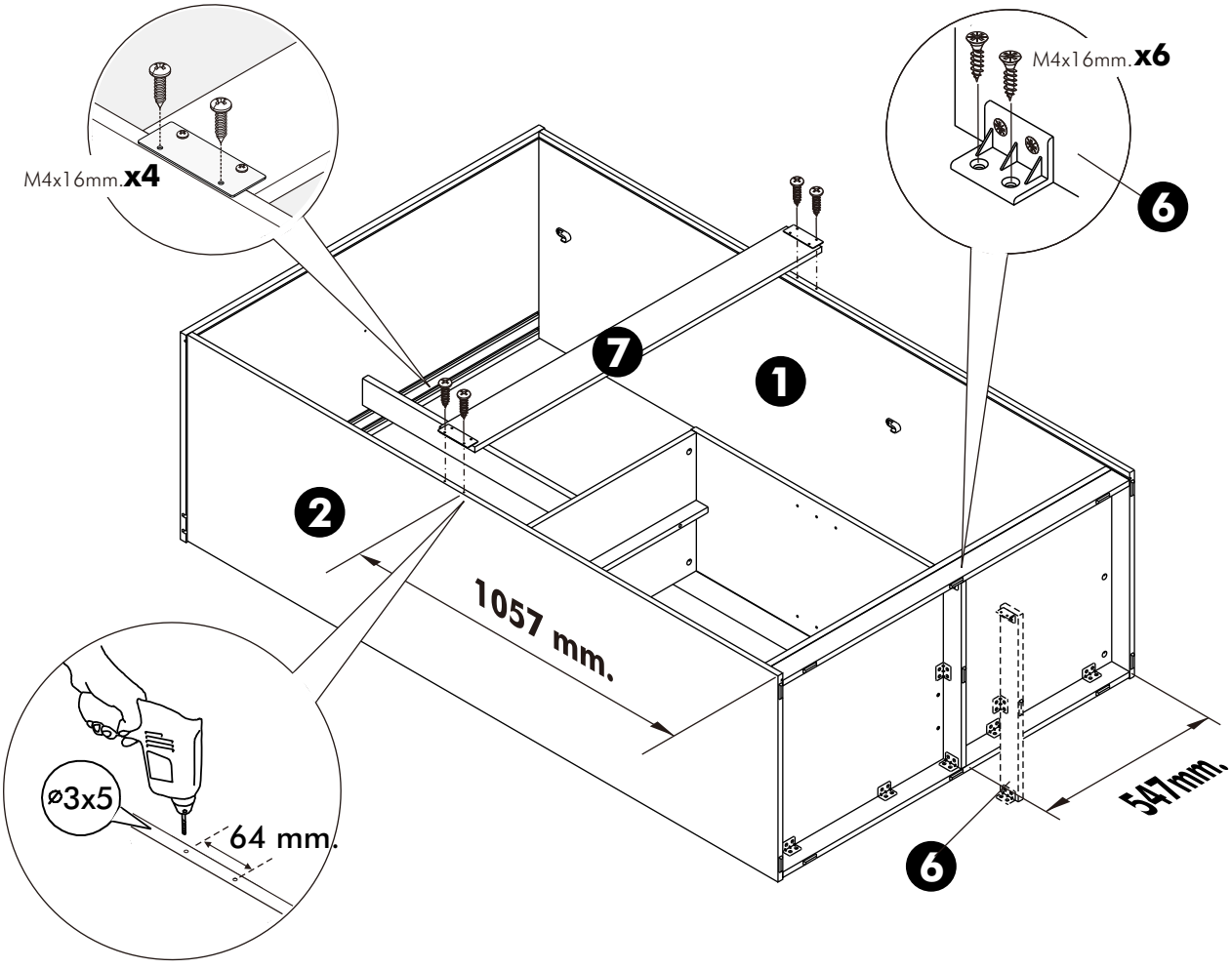
M4x16mm. x4
M4x16mm. x6
6
7
1
2
1057 mm.
ø3x5
64 mm.
547mm.
6

11.

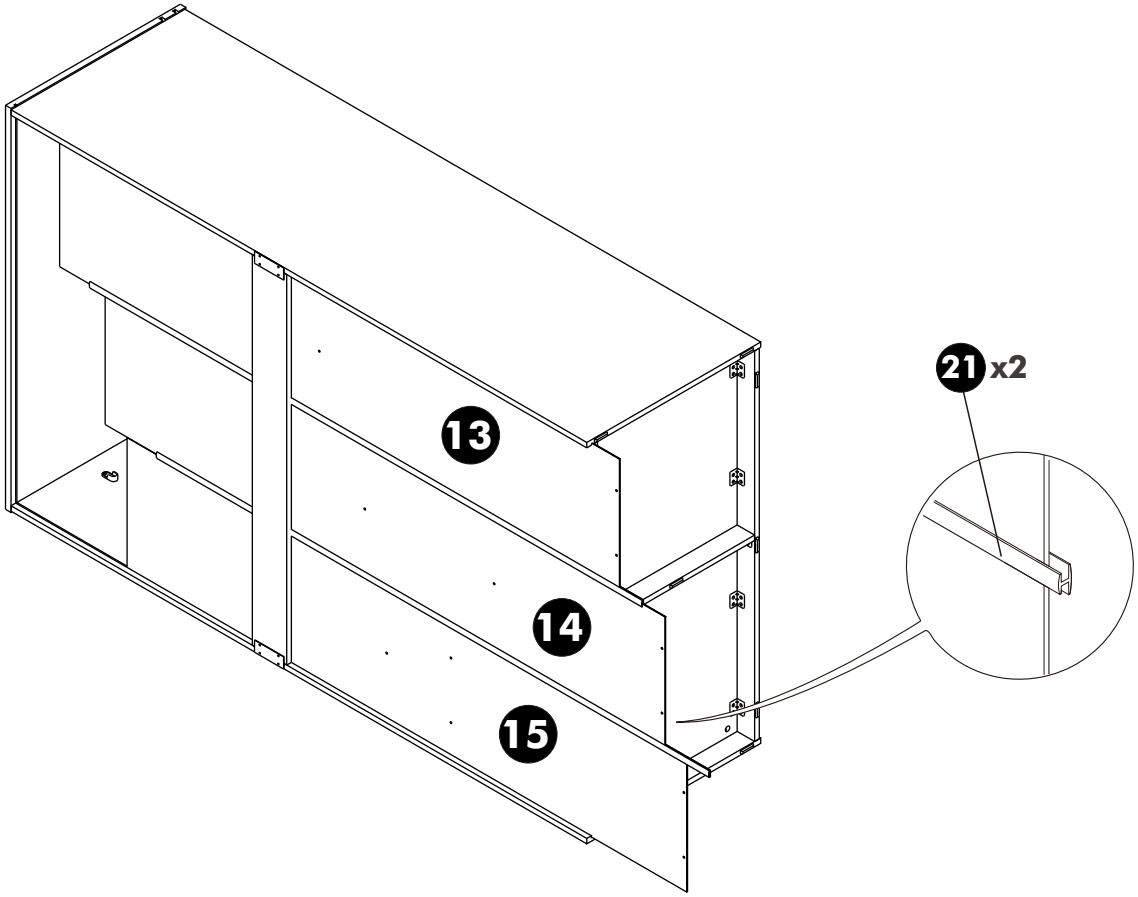

12.

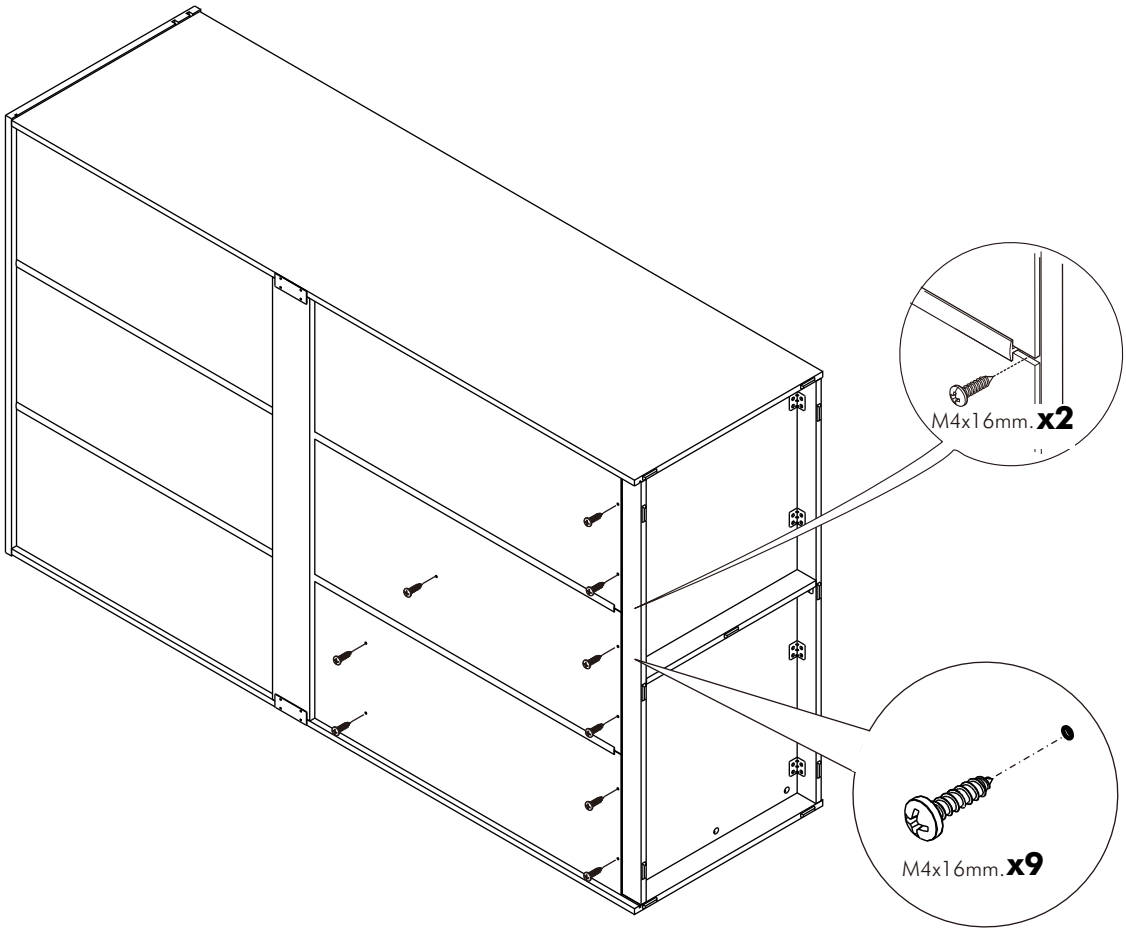

13.

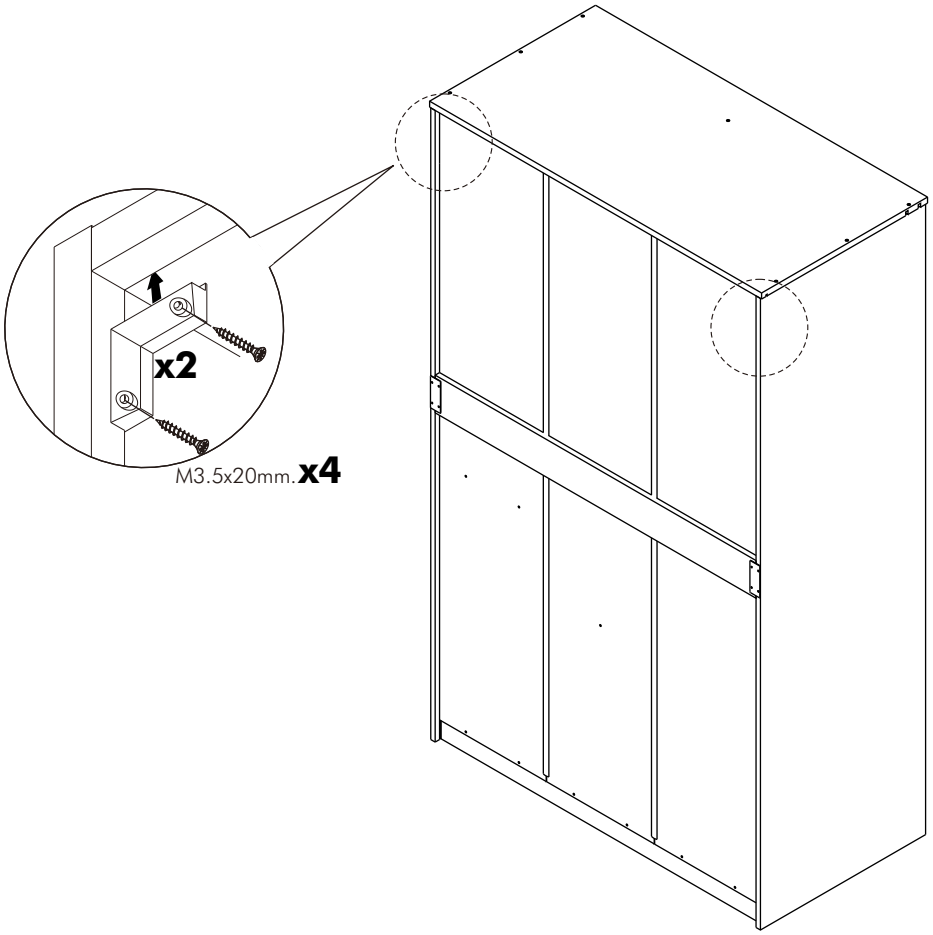

14.

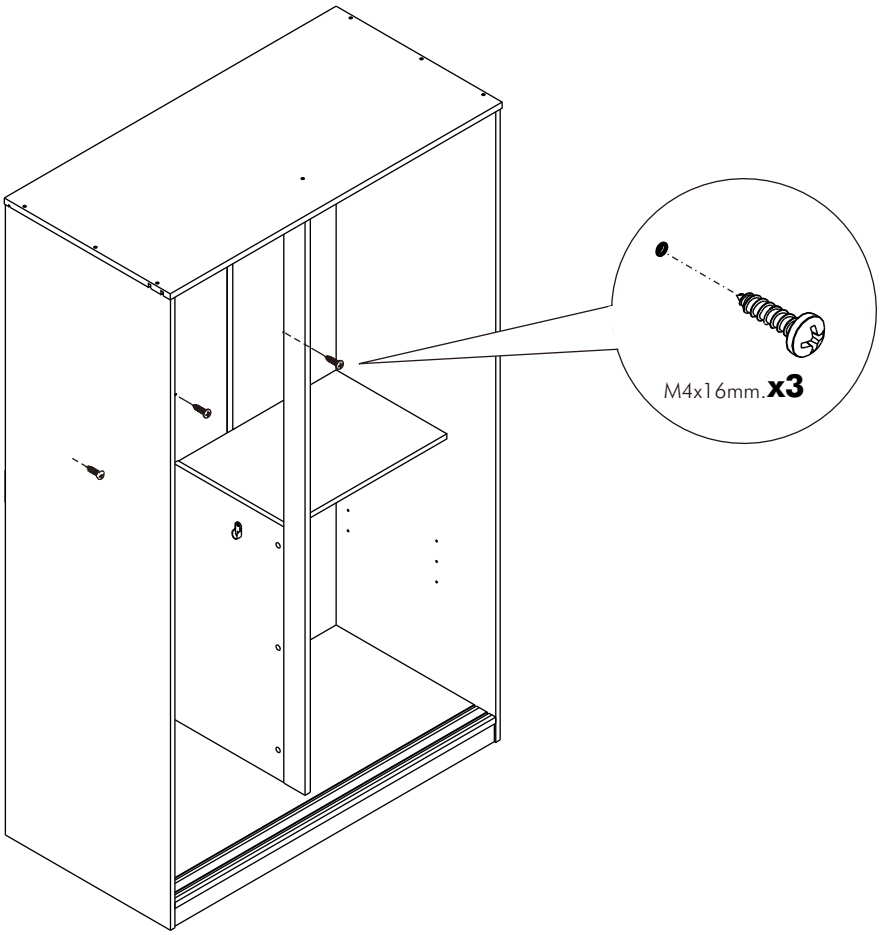

15.

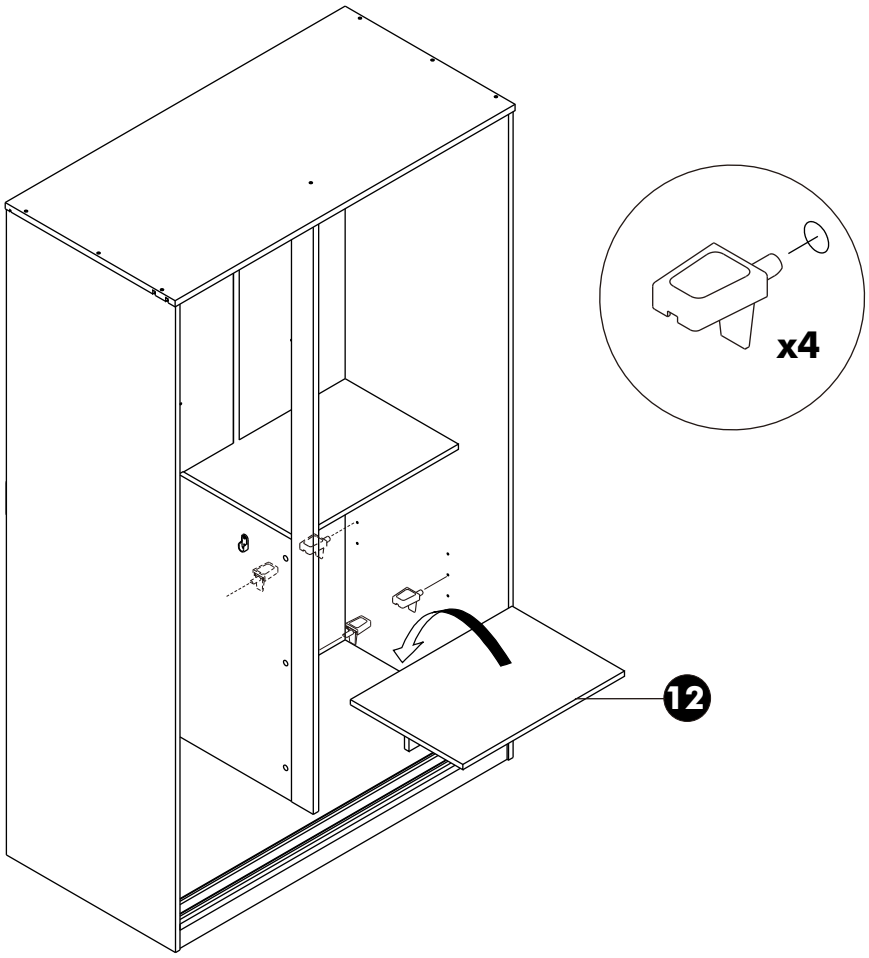

16.

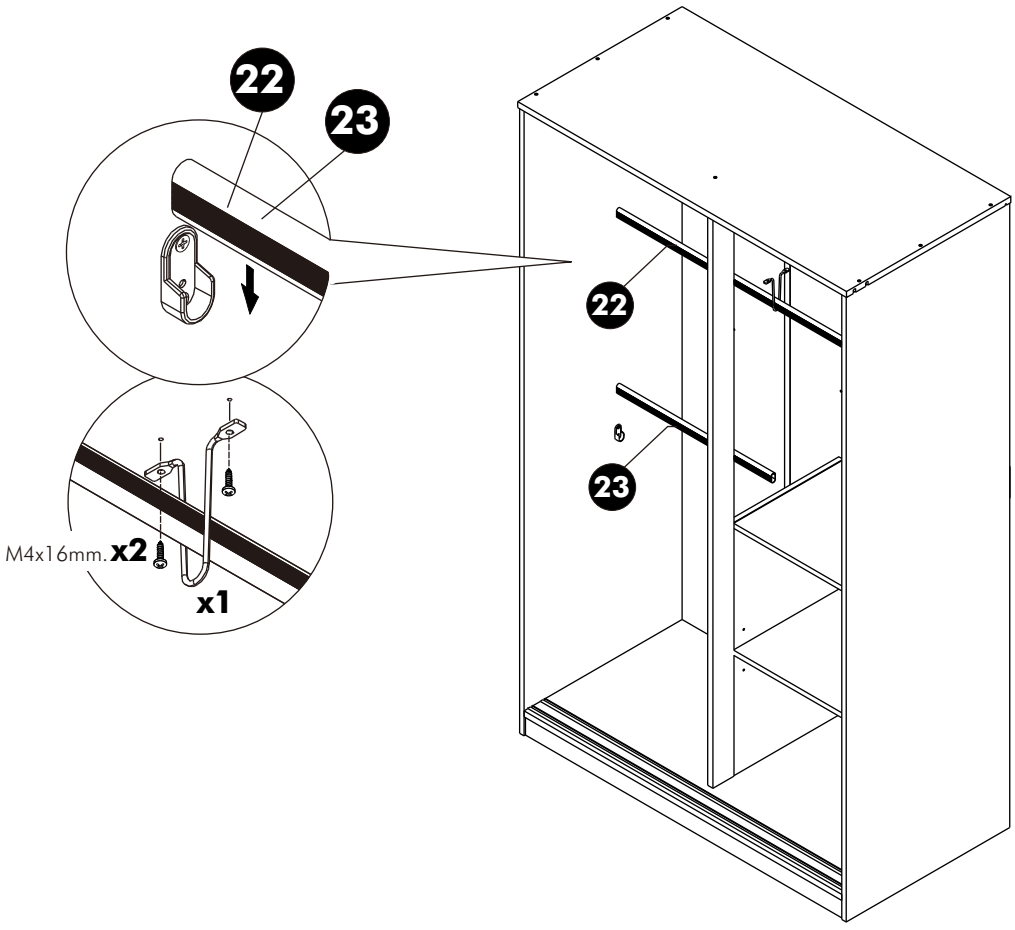

17.

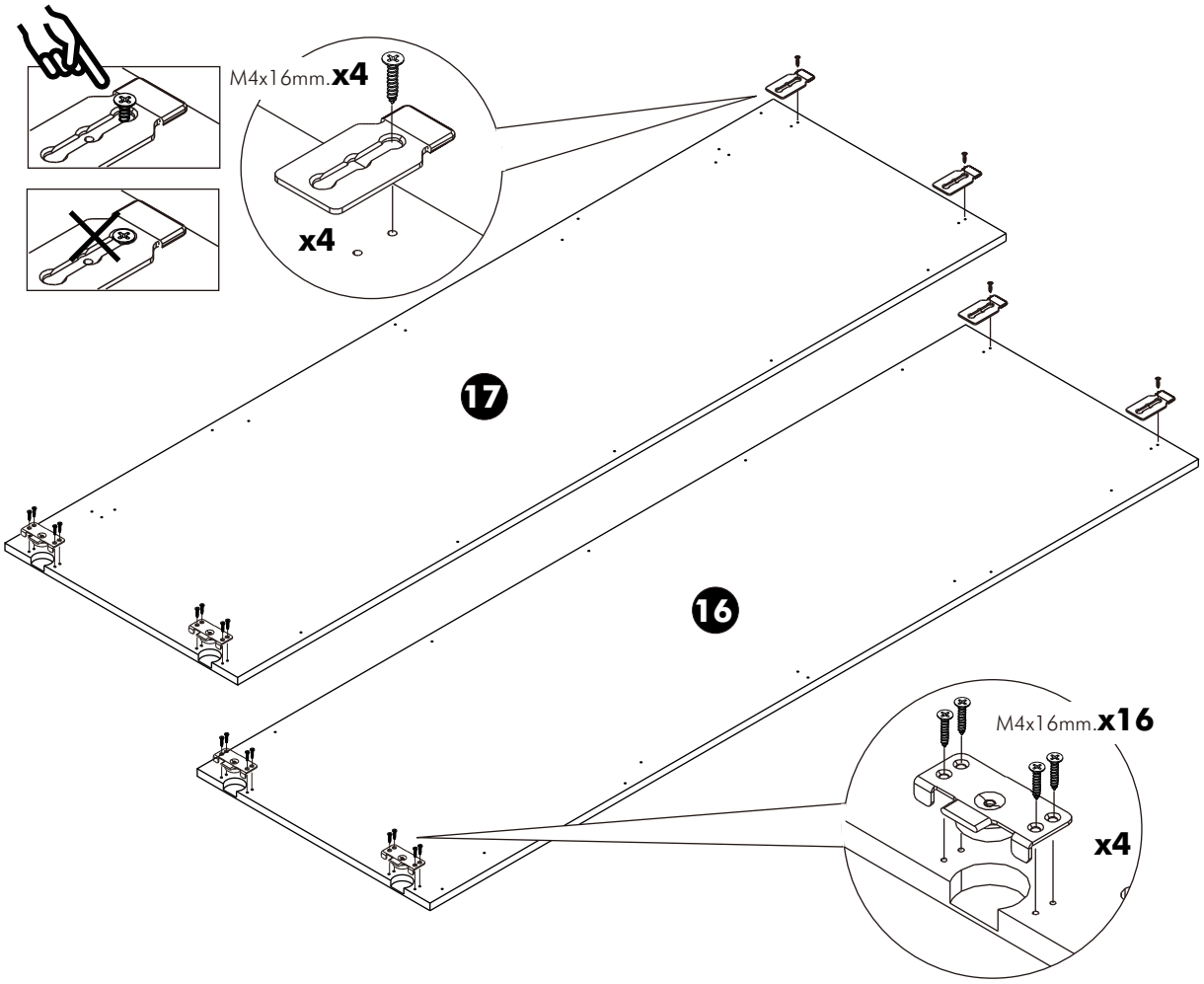

18.

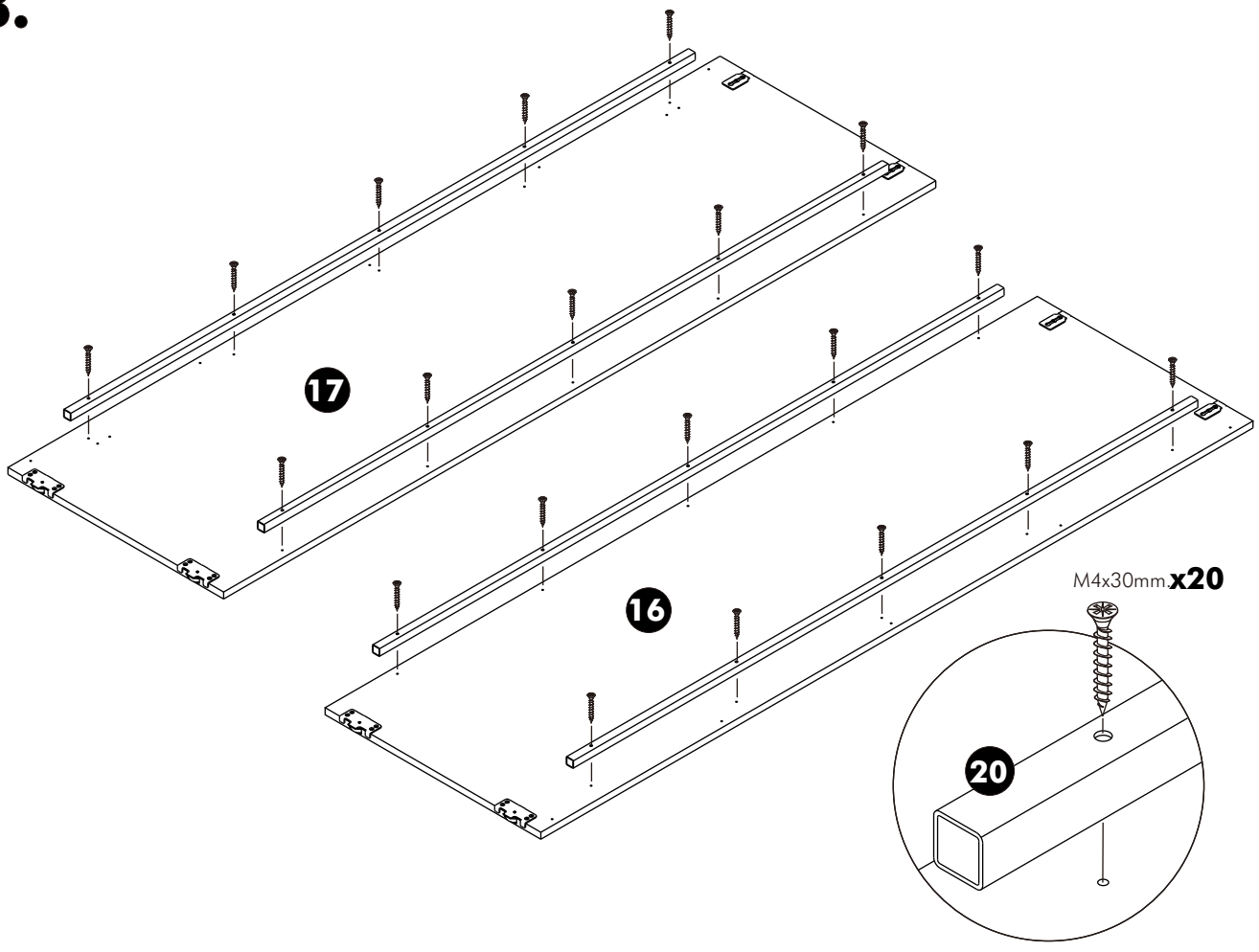

19.

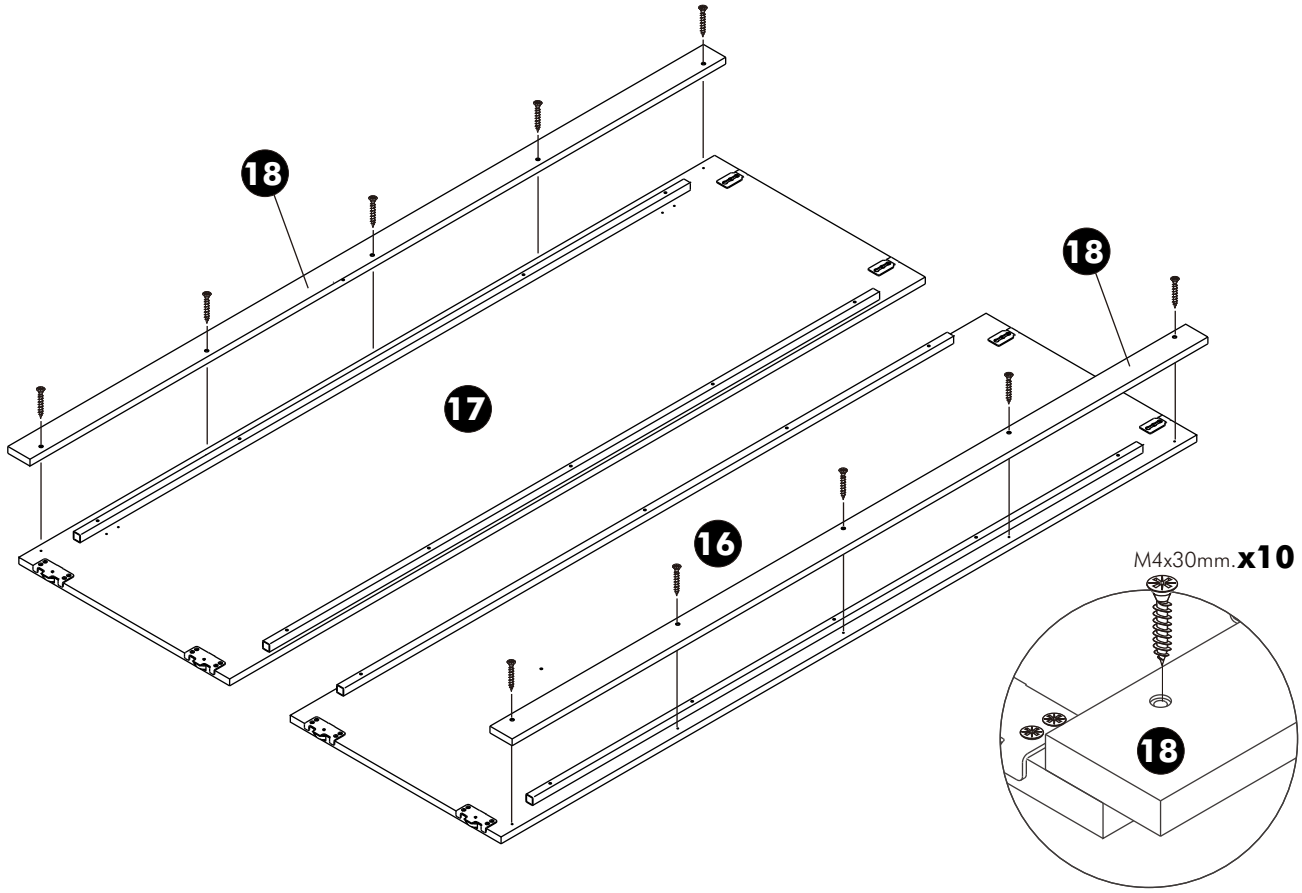

20.

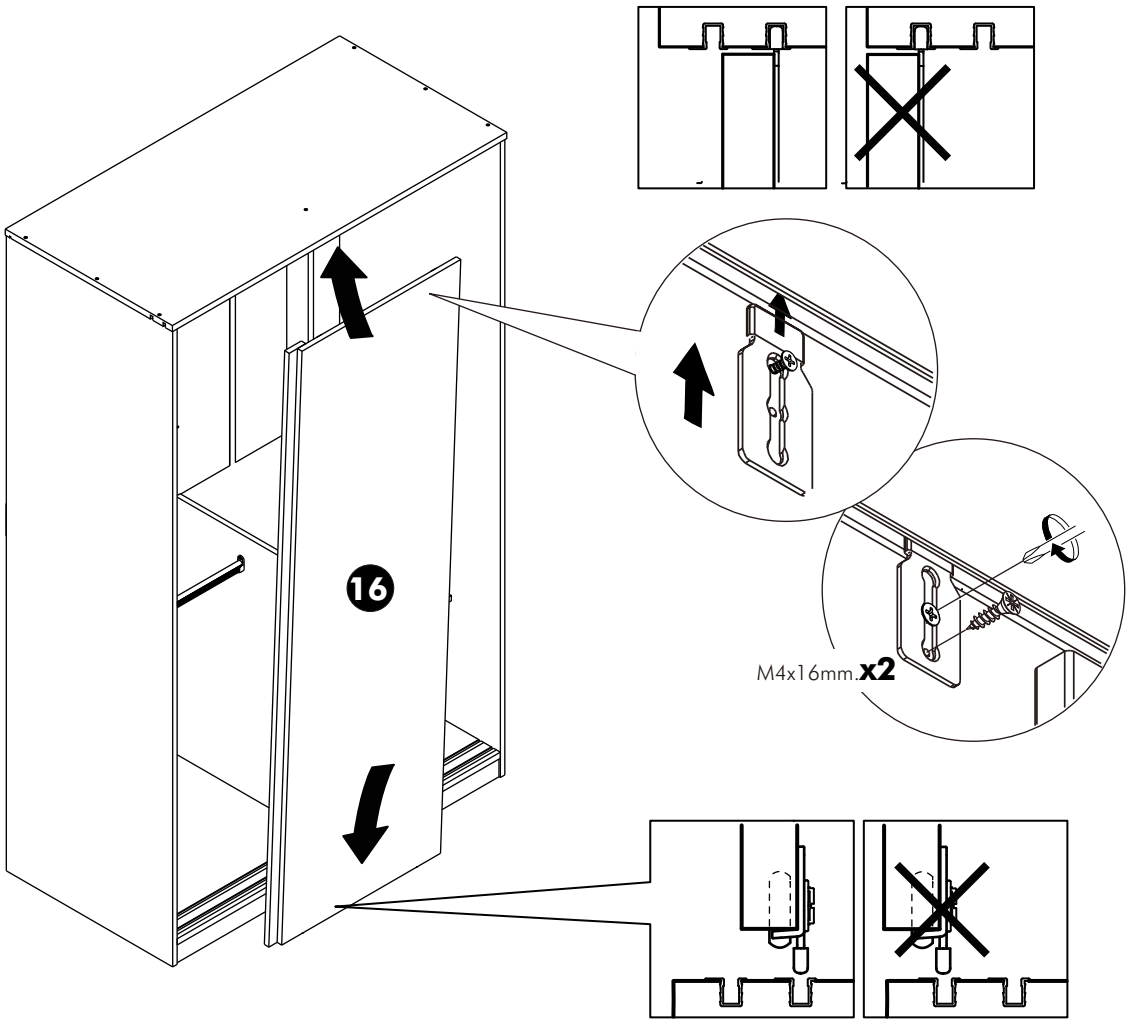

21.

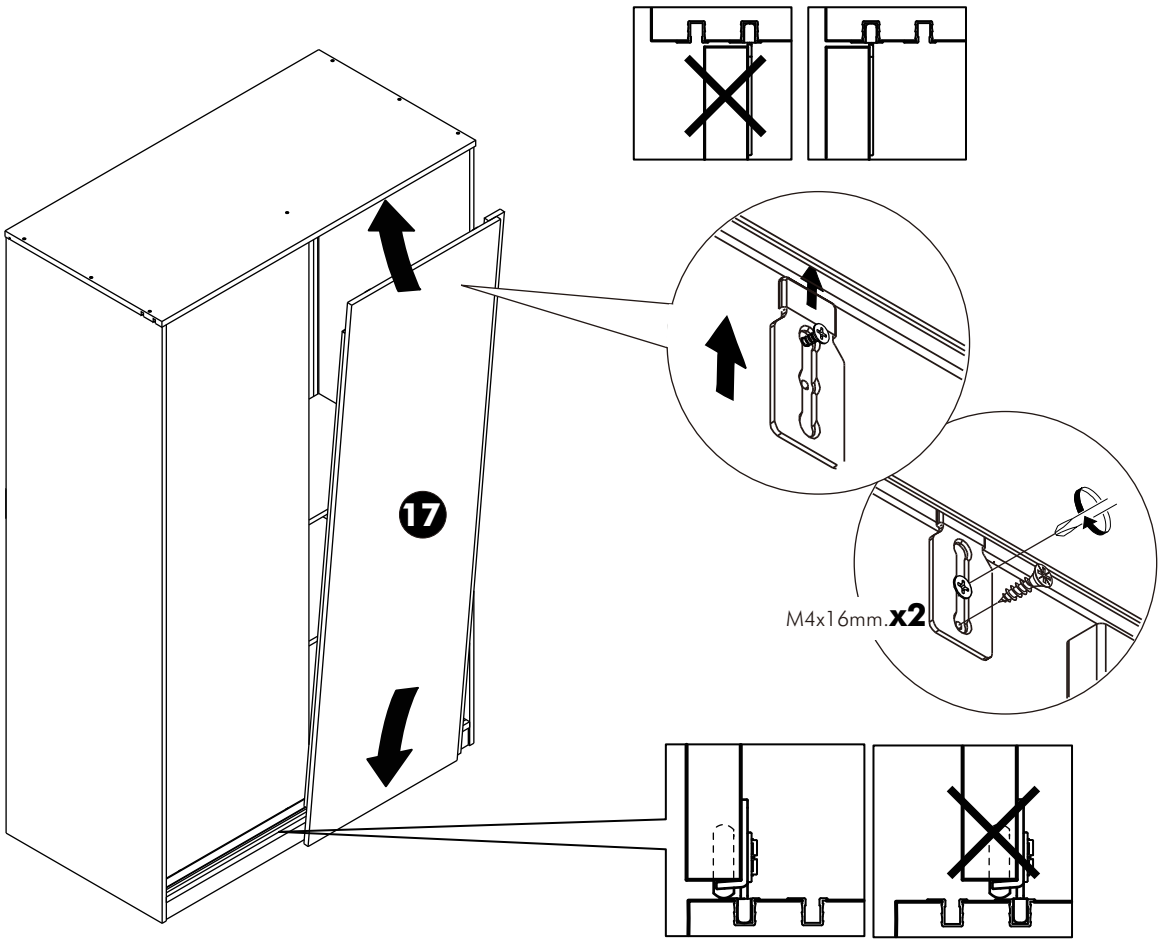

22.

