ITALIVING

Glass Hinge door W45
Mirror Hinge door W45
Hinge door W45H120

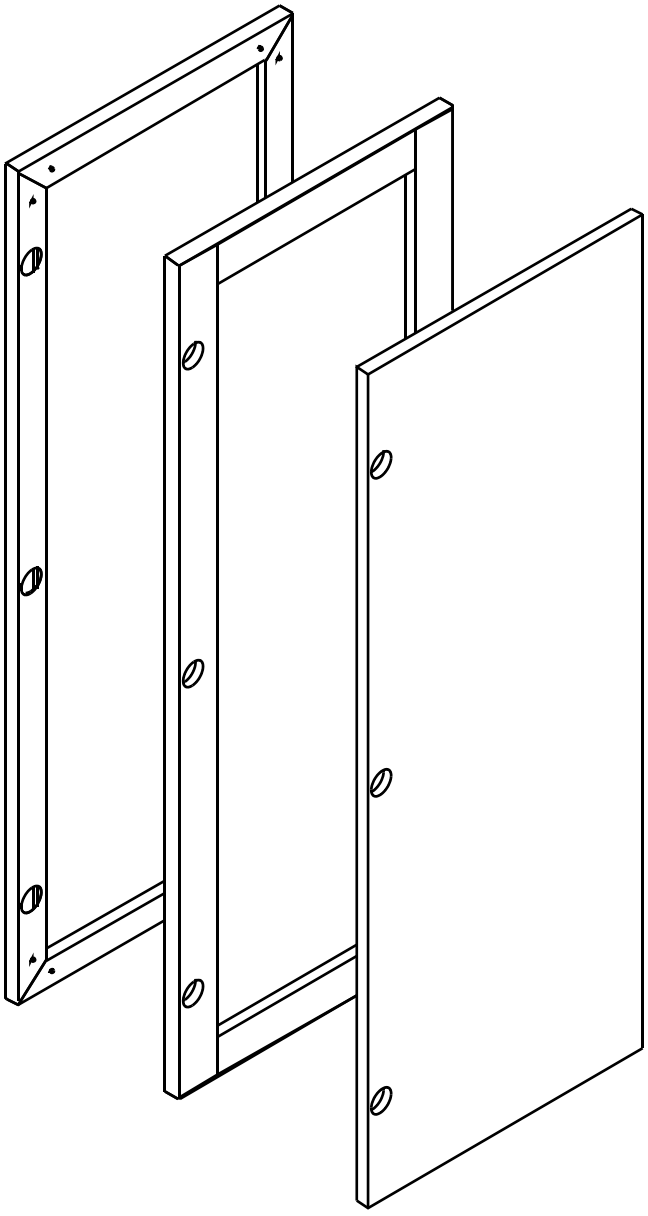

Indexlivingmall

CONNECT SYSTEM



M4x16mm.

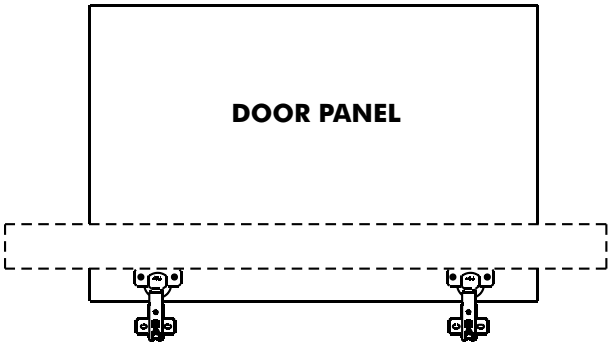

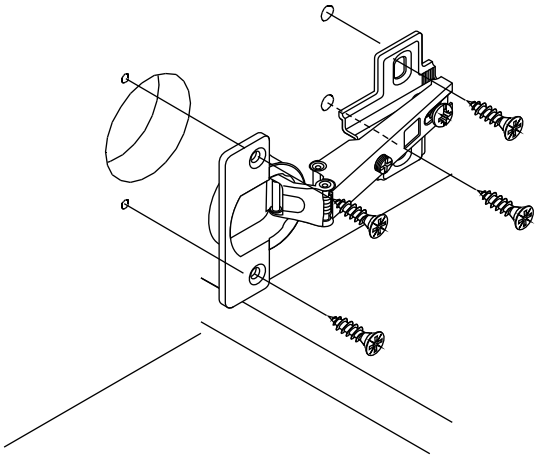

HARDWARE



x 3

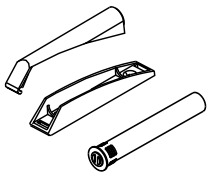

x 1



x 1



M4x16mm.

x 12



#5x1/2".

x 1



#5x5/8"

x 2

1.

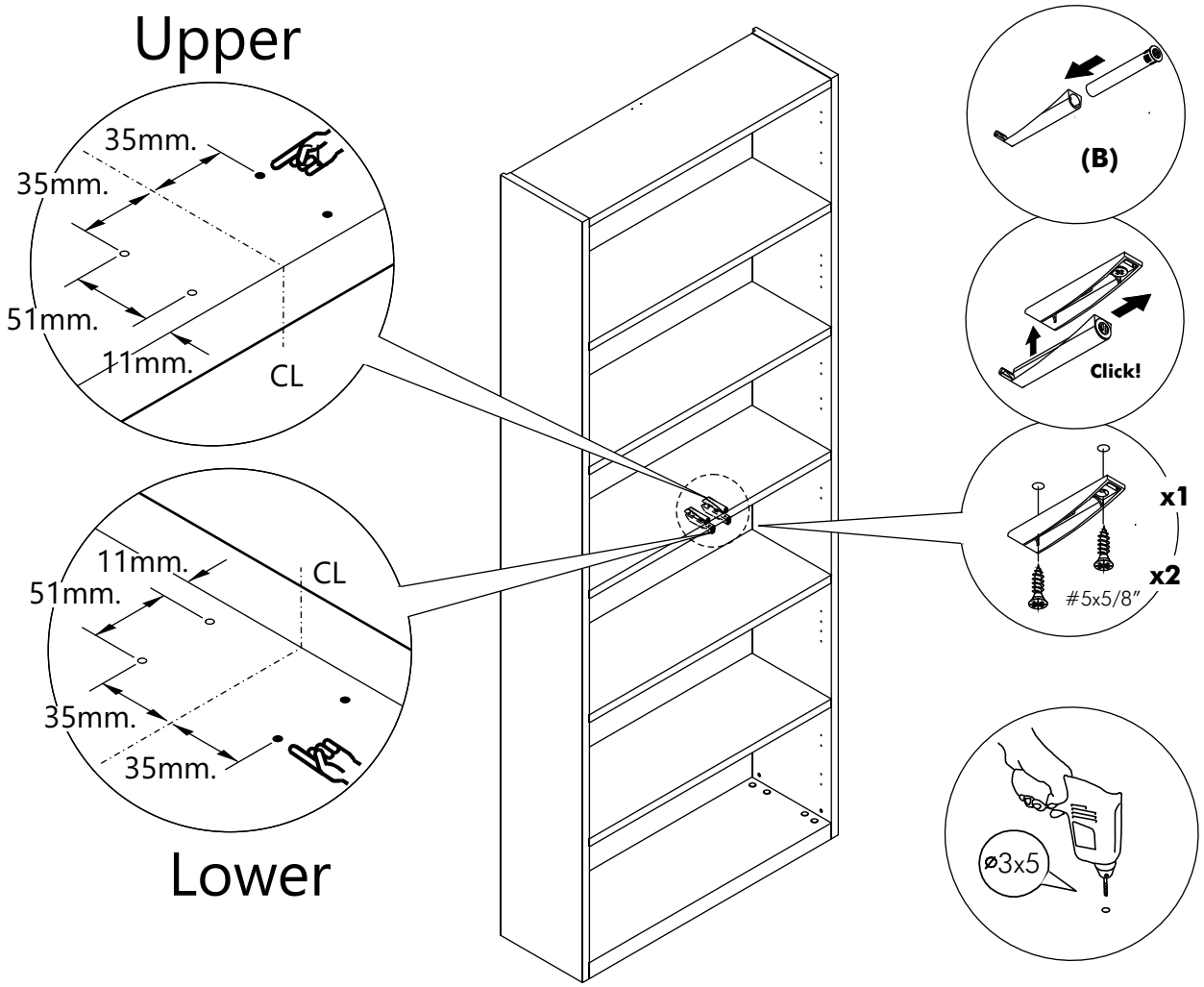
Upper
35mm.
35mm.
51mm.
11mm.
CL
11mm.
51mm.
CL
35mm.
35mm.
Lower
(B)
Click!
x1
x2
#5x5/8"
ø3x5

2.(L)

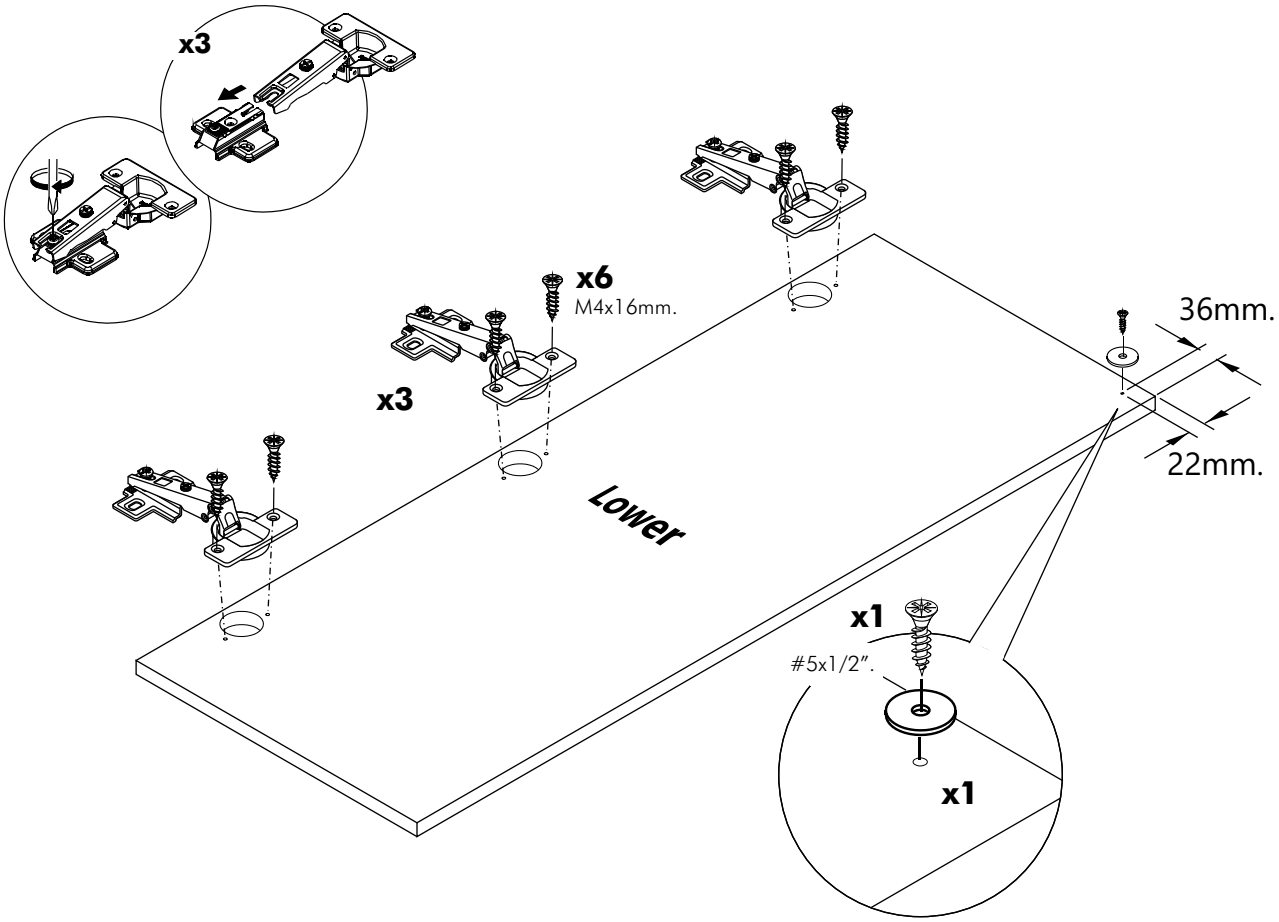
x3
x6
M4x16mm.
x3
36mm.
22mm.
Lower
x1
#5x1/2".
x1

2.(L)

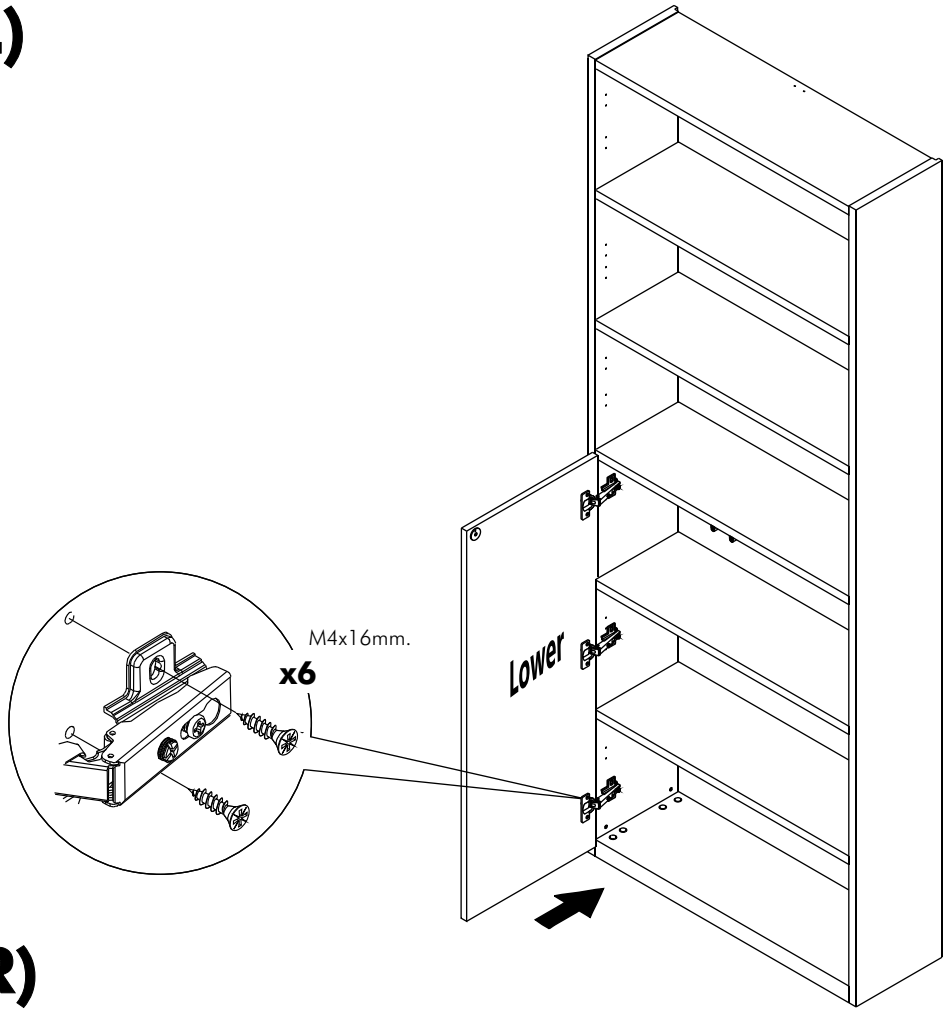

2. (R)

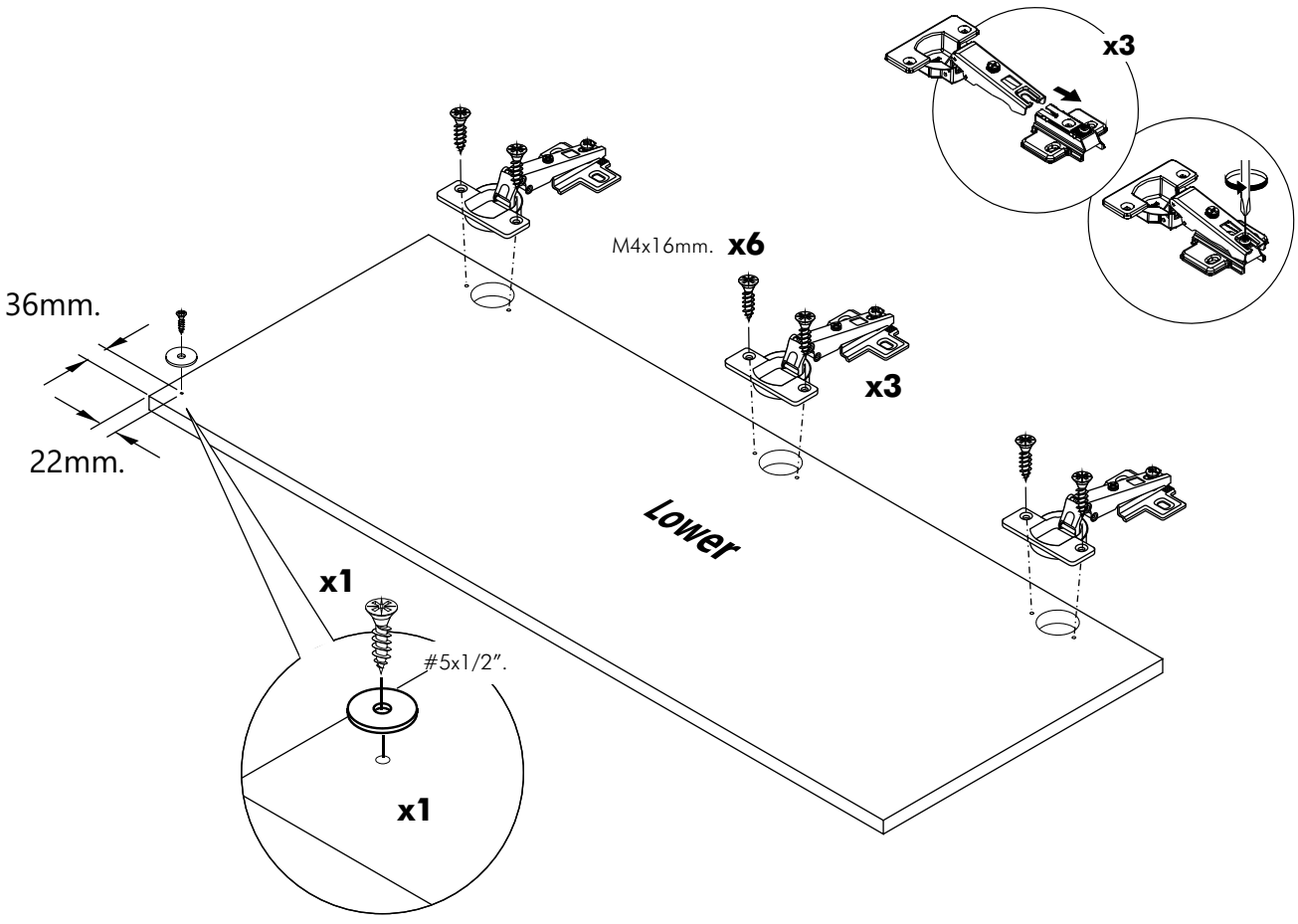

3. (R)

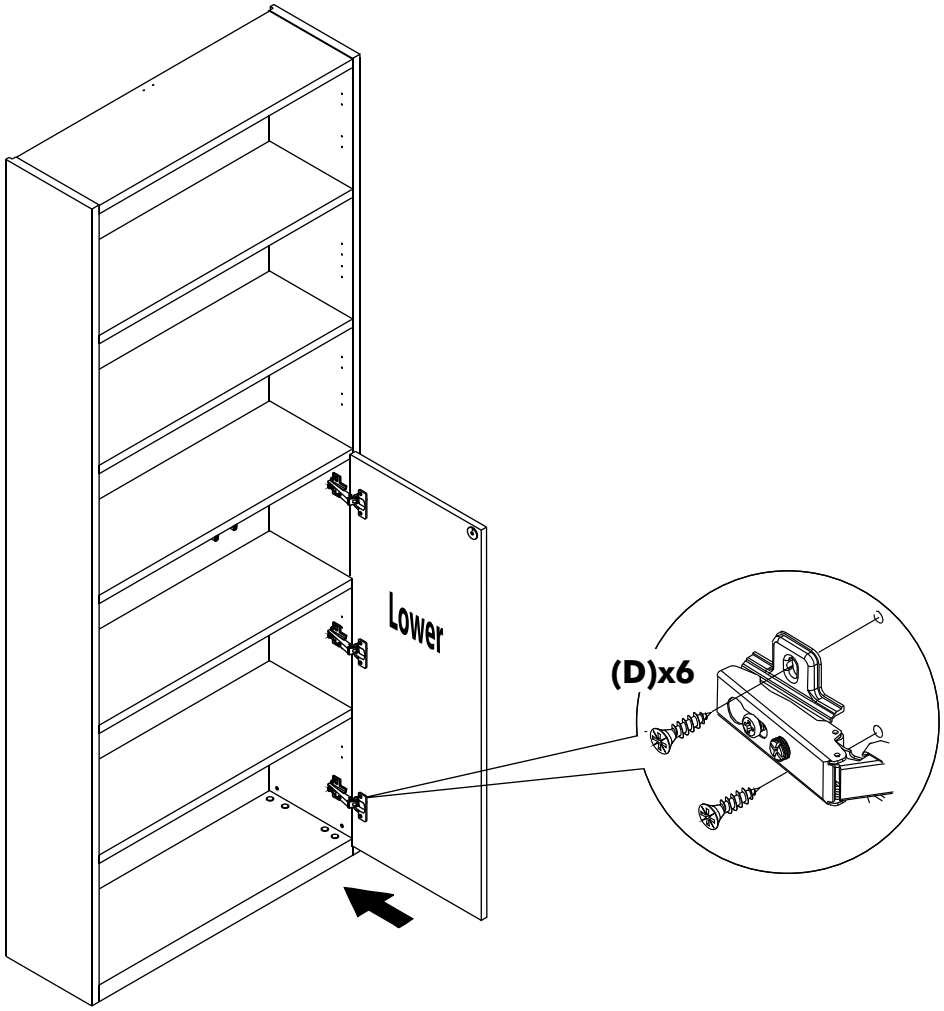

2.(L)

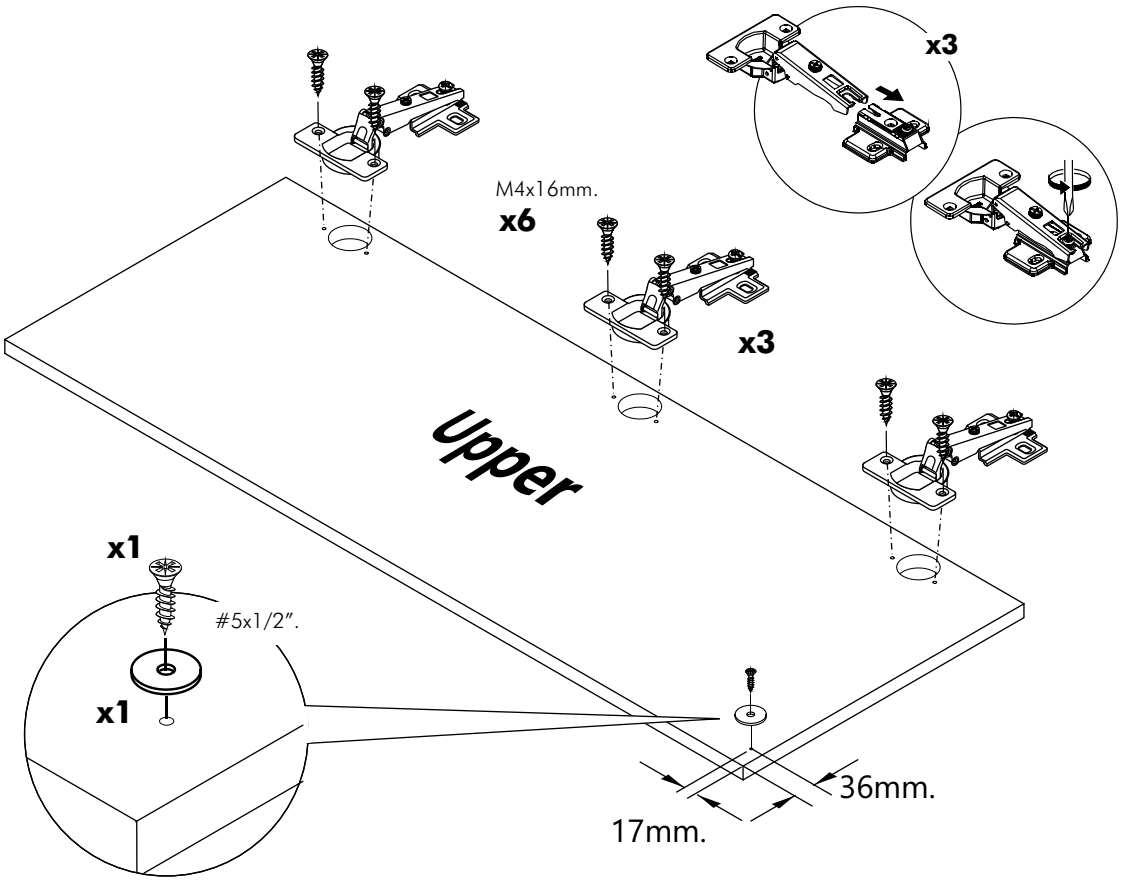

3. (L)

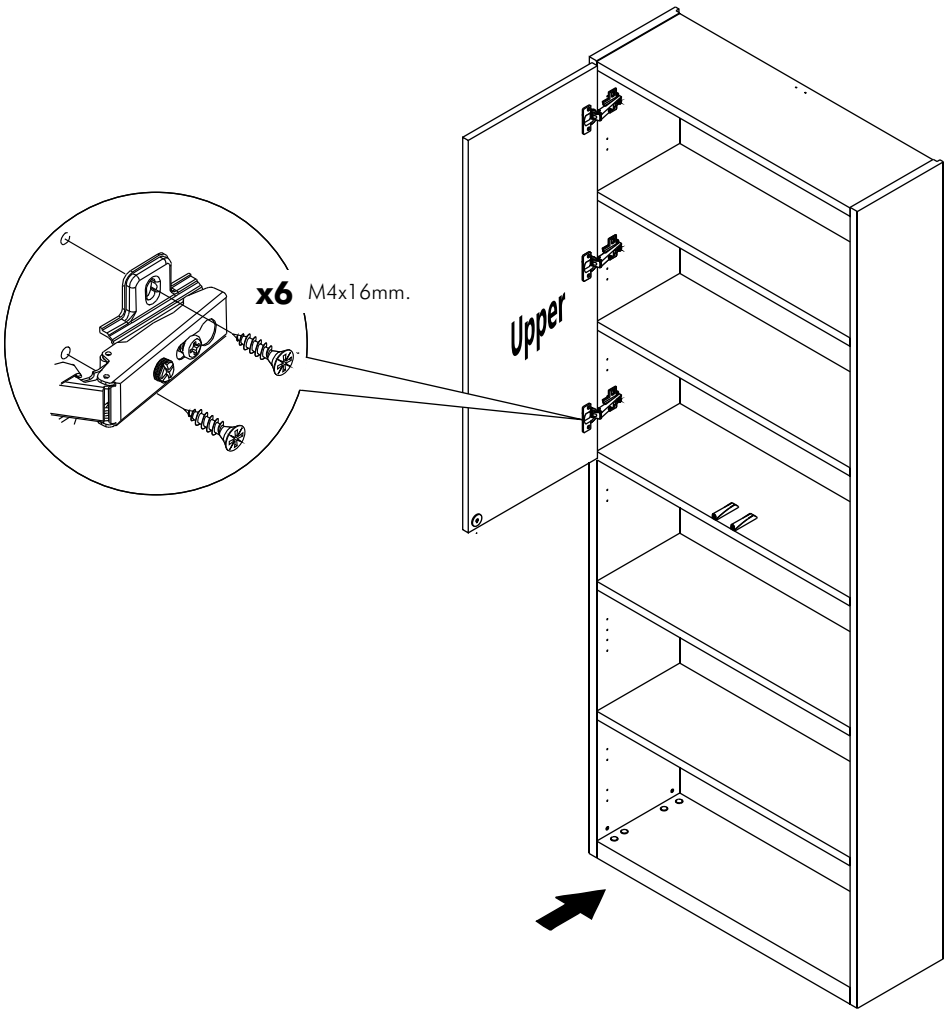

2. (R)

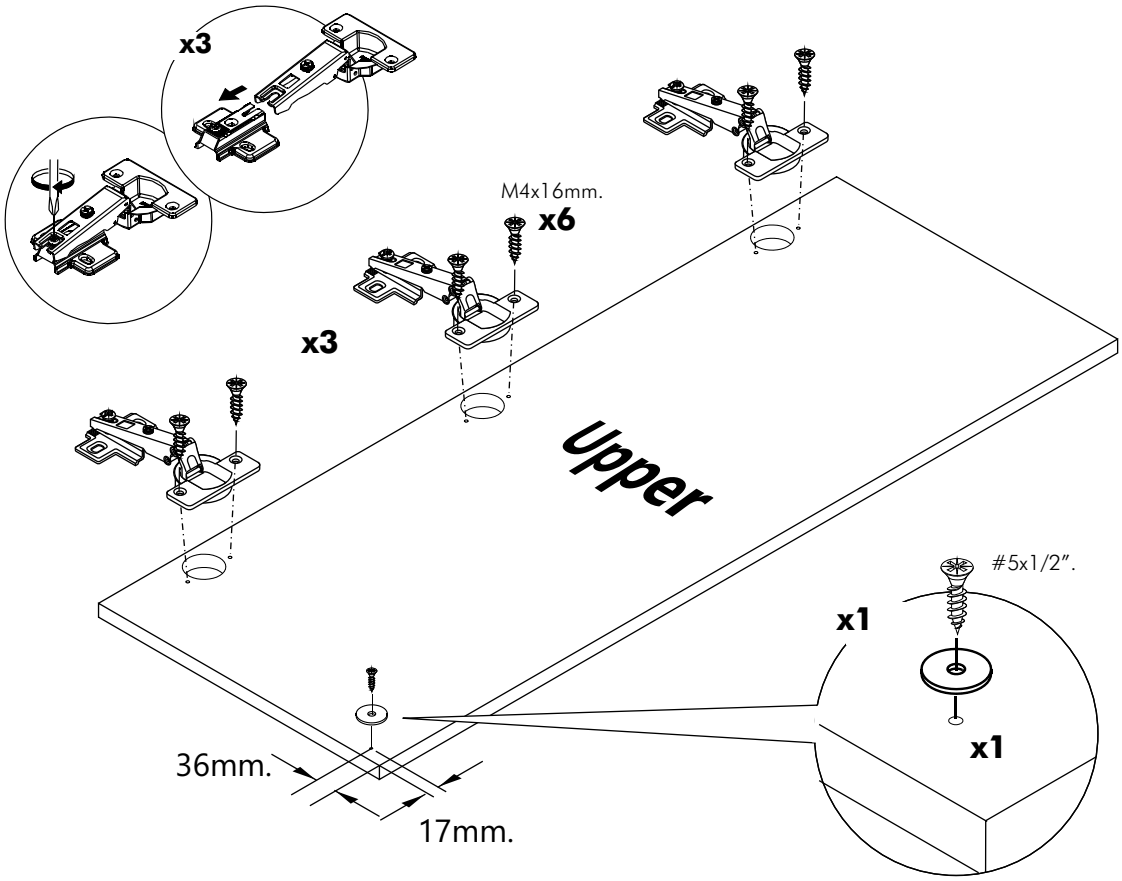

3. (R)

